EMPIRE
COMFORT SYSTEMS
SINCE 1932

INSTALLATION INSTRUCTIONS

INSTALLER:
Leave this manual with the appliance.

CONSUMER:
Retain this manual for future reference.

DIRECT-VENT GAS FIREPLACE HEATER INSERT MODELS:
DVCT(30,35)CBN95(N,P)-3

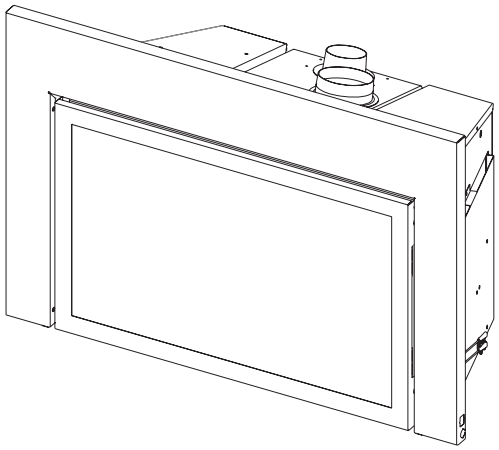

⚠ WARNING

FIRE OR EXPLOSION HAZARD
Failure to follow safety warnings exactly could result in serious injury, death or property damage.

- **Do not store or use gasoline or other flammable vapors and liquids in the vicinity of this or any other appliance.**
- **WHAT TO DO IF YOU SMELL GAS**
  - **Do not try to light any appliance.**
  - **Do not touch any electrical switch; do not use any phone in your building.**
  - **Leave the building immediately.**
  - **Immediately call your gas supplier from a neighbor's phone. Follow the gas supplier's instructions.**
  - **If you cannot reach your gas supplier, call the fire department.**
- **Installation and service must be performed by a qualified installer, service agency or the gas supplier.**

This appliance may be installed into a listed wood-burning fireplace in an aftermarket, permanently located, manufactured home (USA only) or mobile home, where not prohibited by state or local codes.

This appliance is only for use with the type of gas indicated on the rating plate. This appliance is not convertible for use with other gases, unless a certified kit is used.

⚠ DANGER

HOT GLASS WILL CAUSE BURNS.
DO NOT TOUCH GLASS UNTIL COOLED.
NEVER ALLOW CHILDREN TO TOUCH GLASS.

A barrier designed to reduce the risk of burns from the hot viewing glass is provided with this appliance and must be installed for the protection of children and other at-risk individuals.

NATIONAL FIREPLACE INSTITUTE
NFI
CERTIFIED

www.nficertified.org
Our gas hearth products must be installed and serviced by professionals who are certified in the U.S. by the National Fireplace Institute® (NFI) as NFI Gas Specialists.

GAS-FIRED
C UL US
LISTED

UL FILE NO. MH30033
This fireplace is design certified in accordance with American National Standard/CSA Standard ANSI Z21.88/CSA 2.33 and by Underwriters Laboratories as a Direct-Vent Gas Fireplace Heater and shall be installed according to these instructions.

NOTICE: Contact your dealer for installation, service, repair, or warranty claim
Empire Comfort Systems does not sell, service, or provide warranty directly to consumers. The consumer must contact the dealer where the product was purchased for a warranty claim. If a non-qualified installer or consumer installs or services this product, the product warranty is voided. Most dealers will only service products they sold so it is important for the consumer to choose a qualified dealer for installation and warranty service. In order to maintain the warranty, service must be performed annually and documentation reviewed during the warranty request.

TABLE OF CONTENTS

SECTION	PAGE
Attention Installer	3
Before You Start	4
Carton Contents & Hardware Pack	5
Specifications	6
Accessories	7
Venting Accessories	7
Introduction	8-9
Fireplace Insert Dimensions	10
Minimum Fireplace Opening Dimensions	11
Mantel and Trim Clearances	11
Gas Supply	12-13
Electrical Considerations	13
Fireplace Preparation	14
Venting	15
Vertical Termination	16
Installation	17-21
IPI System Electronic System Wiring Diagram	22
Intermittent Pilot Lighting Instructions	23
Safety Information for Users of Propane	24
Intermittent Control System Troubleshooting	25-27
Insert Parts List	28-29
Insert Parts View	29
Maintenance And Service	30
Important Safety Information	31
Appliance Service History	32-33
Master Parts Distributor List	34
How To Order Repair Parts	34
Warranty	35

ATTENTION INSTALLER:

Fireplace Installation Checklist

Use this checklist in conjunction with the instructions in this manual.

Customer: _____ **Date Installed:** _____

Lot/Address: _____ **Fireplace Location:** _____

_____ **Installer:** _____

Model: _____ **Dealer Phone #:** _____

Serial #: _____ _____

		COMMENTS
FIREPLACE INSTALLATION		
Verified clearances to combustibles **(pg. 11)**	☐	_____
Fireplace is leveled and secured	☐	_____
VENTING/CHIMNEY/PowerFlow™ HEAT DISTRIBUTION		
Venting configuration complies to vent diagrams **(pgs. 15 - 18)**	☐	_____
Venting installed, locked, secured in place with correct clearance	☐	_____
Firestops installed	☐	_____
Exterior wall/roof flashing installed and sealed	☐	_____
Terminations installed and sealed **(pg. 16)**	☐	_____
Light unit and test venting before enclosing the fireplace	☐	_____
ELECTRICAL (pgs. 13 and 22)		
Unswitched power (110-120 VAC) provided to the fireplace	☐	_____
GAS (pgs. 12 - 13)		
Proper appliance for fuel type	☐	_____
Was a conversion performed?	☐	**Yes** ☐ **No**
Leak check performed and inlet pressure verified	☐	_____
FINISHING		
Verified all clearances meet installation manual requirements	☐	_____
Mantels and wall projections meet requirements **(pg. 11)**	☐	_____
Granite or Clean Face finishing complies with clearance requirements screen	☐	_____
Barrier for glass front properly installed	☐	_____
FIREPLACE SETUP		
All packaging and protective materials removed (inside & outside of fireplace)	☐	_____
Media installed correctly	☐	_____
Firebox glass door cleaned, installed, and secured	☐	_____
Accessories installed properly	☐	_____
Started Fireplace and checked for gas leaks	☐	_____
Manual envelope and all contents removed from the fireplace and given homeowner	☐	_____

Empire recommends the following:

- Keep this checklist visible on the fireplace until the installation is complete.
- Photograph the installation and copy this completed checklist for your file.

Comments: Further description of any issues, who is responsible (Installer/Builder/Other, etc) and corrective action needed:

_____

Comments communicated to responsible party _____by_____ on _____

BEFORE YOU START

⚠ WARNING

Read and follow these safety precautions prior to operating this appliance. Failure to follow these precautions may result in death, injury, or property damage.

Sample Warnings and Definitions:

⚠ DANGER

Indicates a hazardous situation which, if not avoided, will result in death or serious injury.

⚠ WARNING

Indicates a hazardous situation which, if not avoided, could result in death or serious injury.

⚠ CAUTION

Indicates a hazardous situation which, if not avoided, could result in minor or moderate injury.

NOTICE: Addresses practices not related to personal injury. Read all instructions before starting installation and follow them carefully to insure safety. Failure to follow the instructions will void the warranty and may cause a fire hazard.

NOTICE: If the fireplace insert is installed into a modified wood-burning, factory-built fireplace, the fireplace cannot be returned to a wood-burning fireplace. See page 14 for additional details regarding the allowed modifications to a factory-built fireplace.

The warranty will be voided by, and the warranter disclaims any responsibility for the following actions:

- Installation of any damaged fireplace insert or vent system component.
- Modification of the fireplace insert or direct vent system.
- Installation other than as instructed by Empire Comfort Systems Inc.
- Improper positioning of logs, glass door, barrier screen, or decorative accessories.
- Installation and/or use of any component not manufactured or approved by the manufacturer.

All correspondence should refer to complete Model Number, Serial Number and type of gas. Fill out the Homeowner Reference Section in Homeowner's manual on page 2.

Unpacking the fireplace insert

1. Cut the binding straps.
2. Remove the top carton.
3. Carefully remove the carton contents.
4. Use the Carton Contents and Hardware Pack lists on page 5 to verify all components are present.
5. Verify that the fireplace insert and components have not been damaged during shipping.
6. Set the fireplace insert near installation location.

Preparation

This fireplace insert and its components are safe when installed in accordance with this Installation Manual. Report any parts damaged in shipment to your dealer. Do not install the fireplace insert with damaged, incomplete or substitute parts.

Installation Considerations

- The firebox must be in good working order and sized according to pages 11 and 14.
- Gas supply piping – right or left side entrance
- Electrical supply and connections – for blower
  - 120V, 60Hz, 1 Amp
  - Right side entrance
- Surround Requirements - See Fireplace Insert Dimensions, page 10 and Accessories, page 7.
- Surround Bottom Cover - For elevated insert installations. See dealer for custom surrounds.
- Leveling the Insert - Four leveling bolts are included in the Hardware Pack. See page 17 for installation and use.

Planning The Installation

1. Read the safety information on pages 24 and 31.
2. Place the sticker located in the instruction envelope onto the “Homeowner Reference Information” in Homeowner's manual on page 2.
3. Show the homeowner where the rating plate and lighting instruction plate are located.
4. Install the venting. See pages 15 - 18.
5. Install and connect the gas lines. See pages 12 and 13.
6. Install the wiring. See page 22.
7. Install the fireplace insert. See pages 17 - 21.
8. Remove the barrier and door assemblies.
9. Install the liners, log set, and rock wool. See their manuals.
10. Sync the remote. See page 19.
11. Install the surround. See page 20.
12. Reinstall the door assembly. See page 21.
13. Light the fireplace insert. See page 23.
14. Adjust the damper, air shutters, and rock wool for perfect burn.
15. Troubleshoot any issues. See pages 24 - 26.
16. Reinstall the barrier assembly.
17. Install the decorative front. See their manuals.
18. Show the homeowner how to operate the fireplace insert.
19. Show the homeowner how do the basic maintenance.
20. Instruct the homeowner to never attempt to adjust the air shutters or damper.

TrueFlame Technology

This fireplace is equipped with TrueFlame Technology for maximum flames and ember glow with minimum emissions. The system includes independently controlled front and rear burners set into a large ember bed plus a ceramic catalyst and externally adjustable baffle mounted at the top. Once adjusted by the dealer/technician at installation, the TrueFlame system requires no further adjustment.

CARTON CONTENTS & HARDWARE PACK

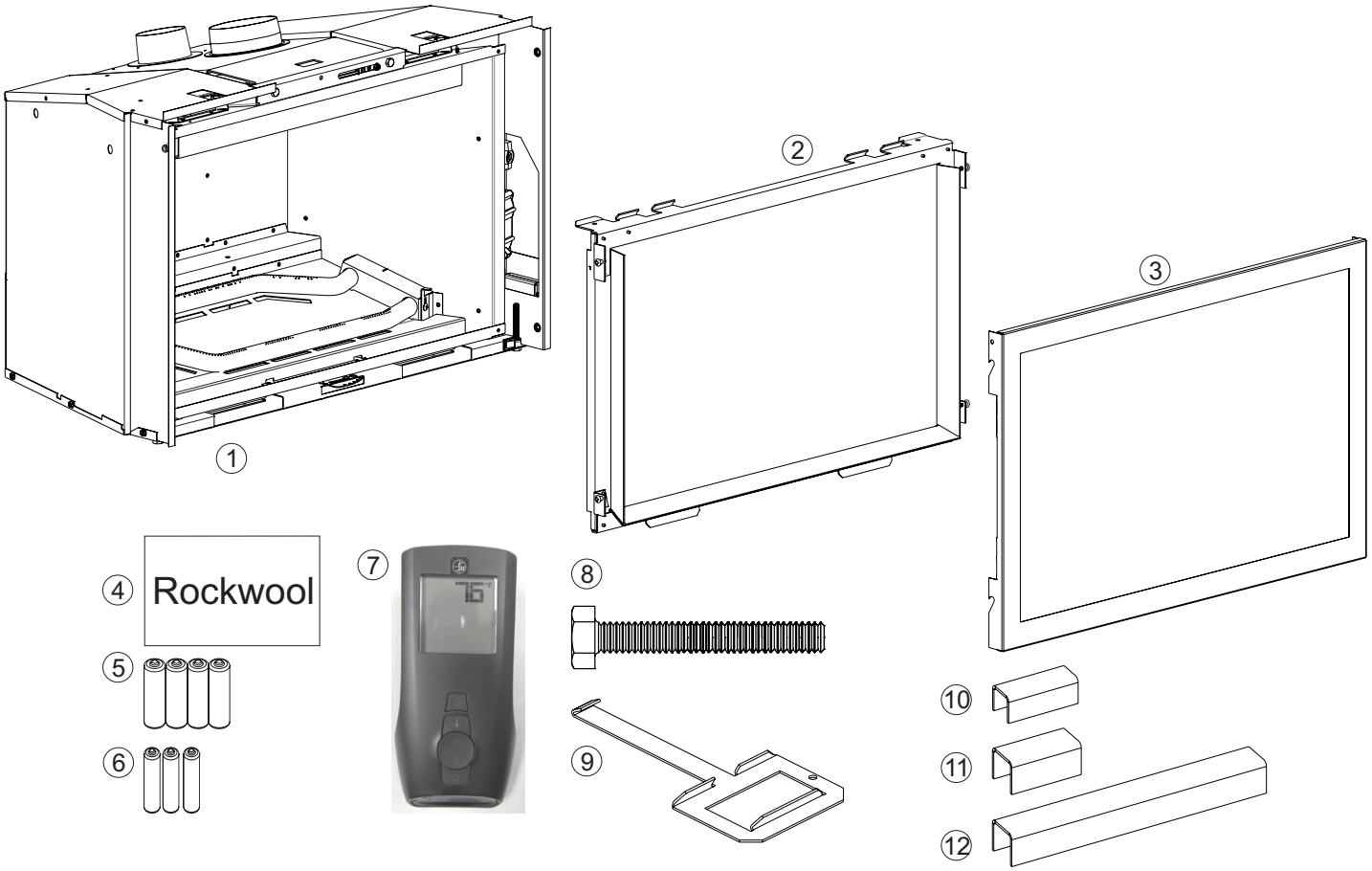

INDEX NUMBER	DESCRIPTION	QUANTITY SUPPLIED	
		DVCT30	DVCT35
1	Fireplace Insert	1	1
2	Glass Door Assembly	1	1
3	Barrier Screen Assembly	1	1
4	Rockwool Embers	1	1
5	AA Batteries	4	4
6	AAA Batteries	3	3
7	Remote	1	1
8	5/16-18 x 2-1/2” Hex Head Bolt	4	4
9	Latch	1	1
10	Support, Rockwool 2 X 1	4	2
11	Support, Rockwool 3 X 1	1	3
12	Support, Rockwool 6 X 1	1	1

SPECIFICATIONS

	DVCT30CBN95(N,P)-2		DVCT35CBN95(N,P)-2	
	Propane	**Natural**	**Propane**	**Natural**
Input BTU/Hr Maximum (Both Burners High)	28,500	30,000	35,000	39,000
Input BTU/Hr Minimum (Both Burners Low)	22,000	19,500	28,500	25,500
Input BTU/Hr Minimum (Only Front Burner Low)	10,000	8,500	11,000	10,000
KWH (Maximum)	8.35	8.79	10.2	11.4
KWH (Minimum) (Front Burner Only)	2.93	2.49	3.2	2.9
Orifice (Rear)	1.20mm	#47	1.40mm	2.40mm
Orifice (Front)	#59	#52	#57	#50
Air Shutter Opening (Rear)	Fully Open	Fully Closed	Fully Open	Fully Closed
Air Shutter Opening (Front)	Fully Open	Fully Closed	Fully Open	Fully Closed
Gas Inlet Shutoff Valve (Pipe)	3/8 MIF	3/8 MIF	3/8 MIF	3/8 MIF

NOTICE: Air shutter settings are factory minimum settings. Some venting configurations may require minor air shutter adjustments for optimum performance.

GAS SUPPLY PRESSURES			
Gas Type	**Maximum**	**Minimum**	**Manifold**
Natural	14	4.5	3.5
Propane	14	10.8	10

ACCESSORIES

DVCT30		DVCT35	
SURROUNDS (REQUIRED)		SURROUNDS(REQUIRED)	
Description (Black)	Model Number	Description (Black)	Model Number
36 x 24 x 1	DS30631BL	40 x 29 x 1	DS35631BL
40 x 27 x 1	DS30961BL	44 x 31 x 1	DS35961BL
42 x 29 x 1	DS301071BL	48 x 33 x 1	DS351071BL
44 x 31 x 1	DS301271BL	52 x 36 x 1	DS351271BL
36 x 24 Flush	DS3063BL	40 x 29 Flush	DS3563BL
42 x 29 Flush	DS30107BL	48 x 33 Flush	DS35107BL

LOG SET (REQUIRED)		
Description	DVCT30	DVCT35
Traditional Charred	LS30TINF	LS35TINF
Driftwood	LS30DINF	LS35DINF

DVCT30 LINER (REQUIRED)		
Description	DVCT30	DVCT35
Black Glass	DVP30CPKR	DVP35CPKR
Rustic Brick	DVP30CPMB	DVP35CPMB
Cottage Brick	DVP30CPTB	DVP35CPTB
Traditional Stone	DVP30CPTS	DVP35CPTS
Old World Stone	DVP30CPWS	DVP35CPWS

DVCT30 BEVELED WINDOW FRAME (OPTIONAL)		
Description	DVCT30	DVCT35
Beveled Window Frame, Brushed Nickel	DF302BNB	DF352BNB
Beveled Window Frame, Oil-Rubbed Bronze, Light	DF302BZT	DF352BZT
Beveled Window Frame, Textered Black	DF302BLX	DF352BLX

DVCT30 DECORATIVE FRONT (OPTIONAL)		
Description	DVCT30	DVCT35
Decorative Forged Front, Hammered Pewter	DFF30FPD	DFF35FPD
Decorative Forged Front, Black	DFF30BL	DFF35BL
Decorative Forged Front, Oil-Rubbed Bronze, Light	DFF30RBL	DFF35RBL

DVCT30 DECORATIVE FRONT INSETS (REQUIRES DECORATIVE FRONT DFF(30,35)FPD)		
Description	DVCT30	DVCT35
Arch Forged Iron Inset	DFF30RPD	DFF35RPD
Rectangle Forged Iron Inset	DFF30CPD	DFF35CPD
Decorative Forged Arch Inset, Black (Requires Rectangle Front)	DFF30RBL	DFF35RBL
Decorative Forged Arch Inset, Oil-Rubbed Bronze, Light (Requires Rectangle Front)	DFF30RBZT	DFF35RBZT
Decorative Forged Rectangle Inset, Black (Requires Rectangle Front)	DFF30CBL	DFF35CBL
Decorative Forged Rectangle Inset, Oli-Rubbed Bronze, Light (Requires Rectangle Front)	DFF30CBZT	DFF35CBZT

GAS CONVERSION KITS			
Kit No.	Conversion Type	Used On	Valve Type
38289	Natural to Propane	DVCT30CBN95N	IP
38290	Propane to Natural	DVCT30CBN95P	IP
38499	Natural to Propane	DVCT35CBN95N	IP
38500	Propane to Natural	DVCT35CBN95P	IP

VENTING ACCESSORIES

VENTING KITS	DESCRIPTION	CONTENTS
SD46DVACL34	Vertical Vent Kit (3-inch x 4-inch)	High-wind round cap, flashing, 35 feet of 3-inch diameter pipe, 35 feet of 4-inch diameter pipe, and clamps. Recommended when installing to an existing round fireplace chimney pipe.
SD3DFA35	Flexliner, 3-inch x 35 feet	35 feet of 3-inch Diameter Pipe With 2 Clamps
SD4DFA35	Flexliner, 4-inch x 35 feet	35 feet of 4-inch Diameter Pipe With 2 Clamps
DVIC3	3-inch Connector Kit	3-inch Connector With 2 Clamps
DVIC4	4-inch Connector Kit	4-inch Connector With 2 Clamps

NOTICE: When installing vent caps, special locally made flashings may be required to properly seal the vent system to the existing chimney termination.

INTRODUCTION

Instructions to Installer

1. Leave this manual with the homeowner.
2. Have the homeowner fill out and mail the Product Registration Card supplied with the fireplace insert or online at www.empirecomfort.com.
3. Show the homeowner how to start and operate the fireplace insert.
4. Attach the warning label plate supplied with the insert to the inside of the firebox of the fireplace into which the gas fireplace insert is installed.
5. Run fireplace insert for a minimum 30 to 35 minutes to burn off oils from manufacturing. Failure to perform this initial burn-off can cause pilot problems. After burn-off, clean flame sensor on IP pilot assembly. See page 39 for sensor location.

Important

Refer to complete Model Number, Serial Number and gas type in all correspondence.

Qualified Installing Agency

Installation and replacement of gas piping, gas utilization equipment or accessories and repair and servicing of equipment shall be performed by a qualified agency. The term “qualified agency” means any individual, firm, corporation or company which either in person or through a representative is engaged in and is responsible for (a) the installation or replacement of gas piping or (b) the connection, installation, repair or servicing of equipment, who is experienced in such work, familiar with all precautions required and has complied with all the requirements of the authority having jurisdiction.

Commonwealth of Massachusetts: The installation must be made by a licensed plumber or gas fitter in the Commonwealth of Massachusetts.

Installation and repair should be done by a qualified service person. The appliance should be inspected before use and at least annually by a qualified service person. More frequent cleaning may be required due to excessive lint from carpeting, bedding material, etc. It is imperative that control compartments, burners and circulating air passageways of the appliance be kept clean.

High Altitude

When installing this unit at an elevation above 2000 feet (in the United States) it may be necessary to decrease the input rating by changing the existing burner orifice to a smaller size. Generally, input should be reduced 4 percent for each 1000 feet above sea level. However, if the heating value of the gas has been reduced, this general rule may not apply. Confirm orifice size with Empire Comfort Systems.

Canadian High Altitude

Altitude: 0-4500 feet (0-1370 m)
When installing this unit at an elevation above 4500 feet (in Canada), check with local authorities.
Consult your local gas utility for assistance in determining the proper orifice for location.

Well Head Gas Installations

Some Natural Gas utilities use “well head” gas. This may affect the Btu output of the unit and promote sooting. Units shall not be converted to use well head gas.

Building Codes

Consult your local building code agency, prior to installation, to ensure compliance with local codes-including permits and inspections.

- The installation must conform with local codes or, in the absence of local codes, with the *National Fuel Gas Code ANSI Z223.1/NFPA 54* Natural Gas and Propane Installation Code, or CSA B149.1 in Canada. *Available from the American National Standards Institute, Inc. 11 West 42nd St., New York, N.Y. 10036.*
- The fireplace insert, when installed, must be electrically grounded in accordance with local codes or, in absence of local codes, with the *National Electric Code ANSI/NFPA 70* or Canadian Electric code, CSA C22.1, if an external electrical source is utilized.

Preparation

This direct-vent gas fireplace insert and its components are tested and safe when installed in accordance with this installation manual. The fireplace insert must be installed into a wood-burning fireplace. Report any parts damaged in shipment; specifically check glass condition. Do not install this unit with damaged, incomplete, or substitute parts. Read all instructions before starting installation and follow these instructions carefully during installation to ensure maximum benefit and safety. Failure to follow them will void the warranty and may present a fire hazard. This direct-vent gas fireplace insert is designed to operate with combustion air siphoned from and all exhaust gases expelled to the outside of the building. The information contained in this manual pertains to all models and gas control systems listed on the front page unless otherwise noted.
These models may be installed in a bedroom or bed-sitting room in the U.S.A. and Canada.

⚠ WARNING

Any change to this fireplace insert or its controls can be dangerous. Improper installation or use of the fireplace insert can cause serious injury or death from fire, burns, explosions, or carbon monoxide poisoning.

Before enclosing the vent pipe assembly, operate the appliance to ensure it is venting properly.

Do not operate this appliance without the glass door installed.

- Due to high temperatures, the appliance must be located out of traffic and away from furniture and draperies.
- Only surrounds supplied by the manufacturer shall be used in the installation of this appliance.
- A barrier designed to reduce the risk of burns from the hot viewing glass is provided with this appliance and shall be installed for the protection of children and other at-risk individuals.
- If the barrier or glass front is removed during servicing or cleaning, it must be installed prior to operating the appliance.
- If the barrier becomes damaged, it must be replaced with the manufacturer’s barrier for this appliance.
- Only doors certified with the appliance shall be used.

- This appliance comes standard with a 120 VAC cord assembly to accommodate the blower accessory. A junction box may be installed in a bottom back corner of the existing solid fuel masonry or factory built fireplace to connect the cord assembly, or the supplied power cord may be routed out onto the hearth to a nearby outlet.
- A 120 VAC circuit for this product must be protected with ground-fault circuit-interrupter protection, in compliance with the applicable electrical codes, when it is installed in locations such as in bathrooms or near sinks.
- Low voltage and 120 VAC cannot be shared within the same wall box.
- Once the appliance is installed check that the control compartment wiring is secured so as to not interfere with the blower, door latches, valve controls, or the barrier assembly.

Warranty Requirements

Any alteration of the original design, installed other than as shown in these instructions or use with a type of gas not shown on the rating plate is the responsibility of the person and company making the change.

The warranty will be voided by, and the warranter disclaims any responsibility for the following actions:

- Installation of any damaged fireplace insert or vent system component.
- Modification of the fireplace insert or direct vent system.
- Installation other than as instructed by Empire Comfort Systems, Inc.
- Improper positioning of the logs or glass door assembly.
- Installation and/or use of any component part not manufactured or approved by manufacturer.

FIREPLACE INSERT DIMENSIONS

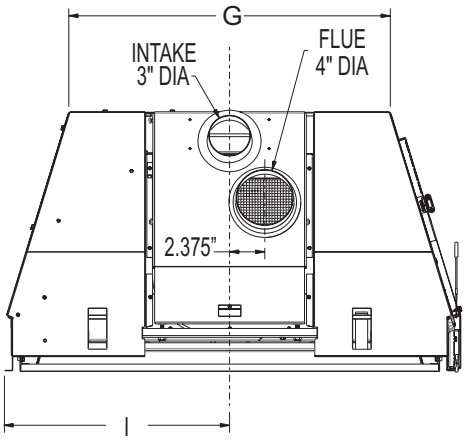

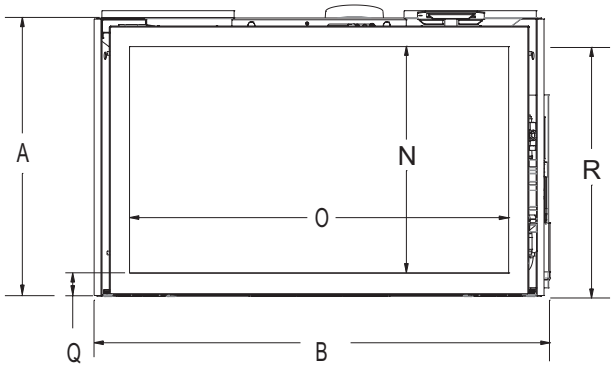

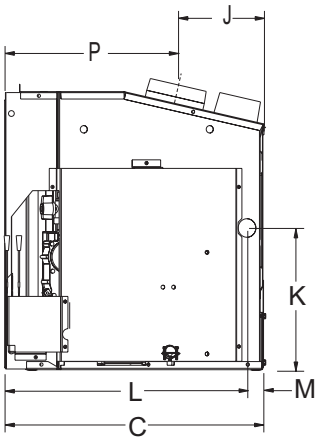

INDEX LETTER	DIMENSION DESCRIPTION	DVCT30	DVCT35
		DIMENSIONS (in inches)	
A	The maximum height of fireplace face	19	24
B	The maximum width of fireplace face	30-11/16	34-3/4
C	The maximum depth of fireplace	17-9/16	18-9/16
D	The height of the fireplace opening (not shown)	15-3/4	20-3/4
E	The width of the fireplace opening (not shown)	25-5/16	29-3/8
F	The interior depth of the fireplace (not shown)	12-3/8	13-3/8
G	The rear exterior width of the fireplace	21-11/16	25-1/8
I	Width from the left side of the fireplace to the centerline of the intake	15-1/8	17-1/8
J	Depth from back of fireplace to centerline of top flue	5-7/8	6-15/16
K	Height from the bottom of the fireplace to the gas line opening	9-3/4	9-1/4
L	Depth from the front of the fireplace to the gas line opening	16-7/16	16-13/16
M	Depth from the rear of fireplace to gas line opening	1-1/8	1-13/16
N	Viewing area height	14-7/8	19-7/8
O	Viewing area width	25-1/4	29-1/4
P	Depth from front of fireplace to centerline of flue	11-5/8	11-5/8
Q	Distance from floor to bottom fireplace opening	1-3/4	1-3/4
R	Distance from floor to top fireplace opening	17	22

MINIMUM FIREPLACE OPENING DIMENSIONS

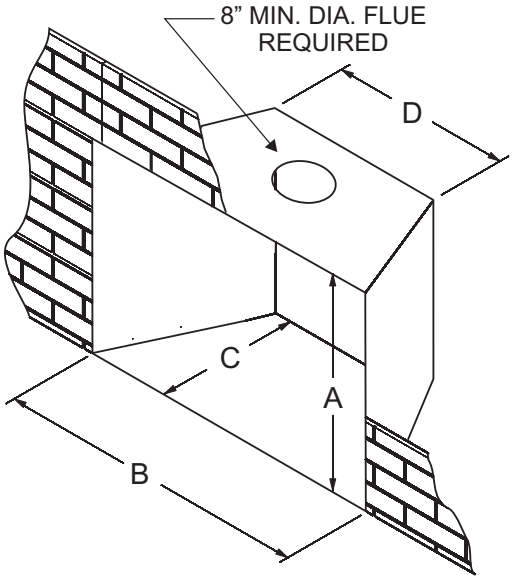

DIMENSIONS (in inches)				
Model No.	Height A	Front Width B	Depth C	Rear Width D
DVCT30	19-1/2	31-1/4	18*	22
DVCT35	24-1/2	35-1/4	19*	25-3/4

*Subtract surround depth from dimension C.

MANTEL AND TRIM CLEARANCES

Combustible Material

No greeting cards, stockings or ornamentation of any type should be placed on or attached to the fireplace. The flow of heat can ignite combustibles.

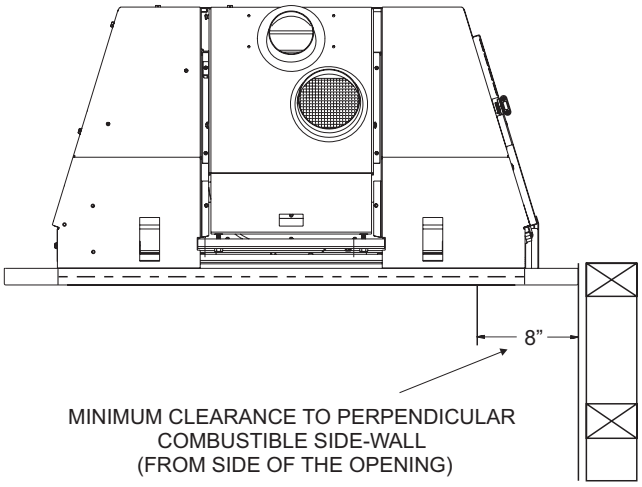

Figure 1

Television Considerations

Installing a television above a fireplace has become increasingly popular; however, the area above any fireplace gets hot and most TV manufacturers recommend against placing their products near a heat source.

If you install a television above this fireplace insert, Empire Comfort Systems accepts no responsibility for damage or injuries. Follow the television manufacturer’s installation instructions, including any recommendations regarding proximity to heat sources.

If you have a TV above your fireplace, turn off the fireplace and let it cool completely before servicing or touching any buttons on the TV.

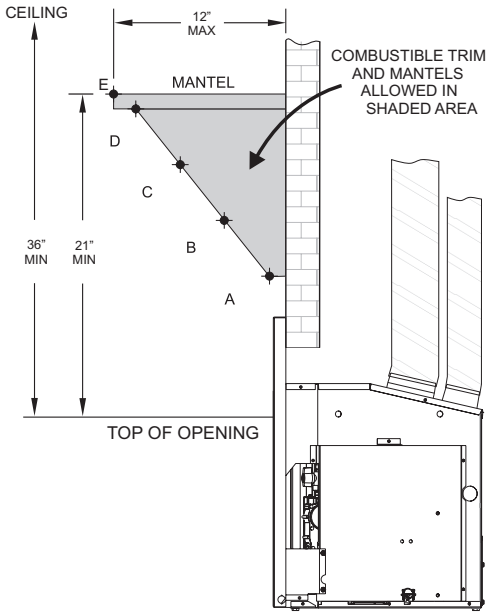

NOTICE: Zero clearance allowable for Hearth below insert.

INDEX LETTER	DISTANCE FROM FIREPLACE FACE	DISTANCE FROM TOP OF OPENING
	DIMENSIONS (in inches)	
	Maximum	Minimum
A	1-3/4	12
B	4-1/2	16
C	7-1/4	17
D	9-1/4	20
E	12	21

Figure 2

NOTICE: Mantel must be placed above the surround.

GAS SUPPLY

If the fireplace where you are installing the insert has no gas line access hole, drill an access hole of 1.5 inch (37.5 mm) or less through the lower sides or bottom of the firebox. After the running the gas line, use non-combustible insulation to block the opening around the pipe.

The gas pipeline can be brought in through the right or left side of the appliance. The insert has a Flexline with shut-off valve located on the right side when facing the unit. **See Figure 3.**

Consult the current National Fuel Gas Code, ANSI Z223.1 CAN/CGA-B149 (.1 or .2) installation code.

NOTICE: Once the gas access hole is drilled, the fireplace cannot be converted back to burning a solid-fuel.

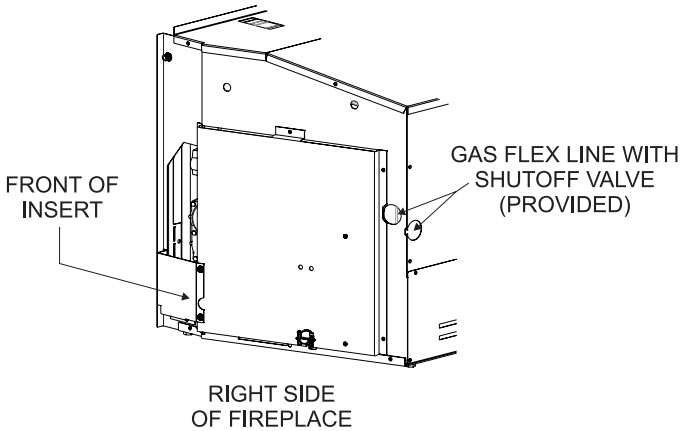

Figure 3

NOTICE: Never use plastic pipe for gas line. Check local codes before using copper tubing or galvanized.

NOTICE: Some municipalities have additional codes. Consult your local authority and installation code.

Use the following gas connectors:

— ANSI Z21.24 Appliance Connectors of Corrugated Metal Tubing and Fittings.

— ANSI Z21.45 Assembled Flexible Appliance Connectors of Other Than All-Metal Construction

The above connectors may be used if acceptable by the authority having jurisdiction. The Commonwealth of Massachusetts requires that a flexible appliance connector cannot exceed three feet in length.

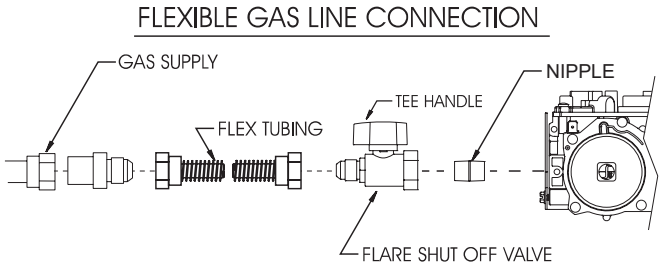

Figure 4

Install a gas valve and ground joint union in the gas line upstream of the gas control to aid in servicing. The National Fuel Gas Code requires installing a drip leg near the gas inlet. The drip leg consists of a vertical length of capped pipe installed before the gas inlet to collect condensation and foreign particles. **See Figure 5.**

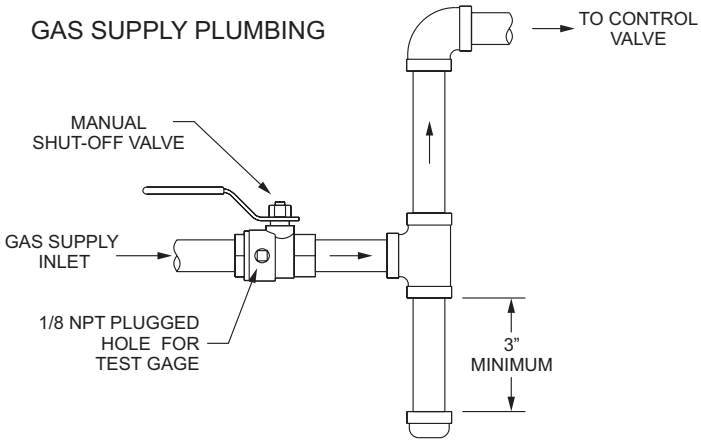

Figure 5

GAS SUPPLY (CONT'D)

Installing a New Main Gas Shut-Off Valve

Each appliance must have its own manual gas shut-off valve located in close proximity. Where none exists, or where its size or location is not adequate, contact your local authorized installer for replacement or relocation.

Test For Leaks On Exposed Connections

⚠ DANGER

Never use an exposed flame to check for leaks.

Turn Off the Fireplace. Compounds used on threaded joints of gas piping must be resistant to the action of liquefied petroleum gases. Check all gas connections for leaks with a leak test solution or soap solution. Rinse off all of the solution after testing. DO NOT get solution on electronic controls.

Test For Leaks On Unexposed Connections

Perform a pressure test on all unexposed connections.
Never pressure test with fireplace connected; control valve will sustain damage. Disconnect the fireplace from piping at the control valve inlet and cap the pipe before pressure testing.
NOTICE: The IP valve is equipped with a captured screw type pressure test port, therefore it is not necessary to provide a test point upstream.
Disconnect the appliance and its individual shut-off valve from the gas supply piping system before any pressure testing of that system at test pressures in excess of 1/2 psig (3.5kPa).
Isolate the appliance from the gas supply piping system by closing its manual shut-off valve during any pressure testing of the gas supply piping system at test pressures equal to or less than 1/2 psig (3.5kPa).

⚠ WARNING

If one of the procedures results in pressures in excess of 1/2 psig (14-inch w.c.) (3.5 kPa) on the fireplace gas valve, it will result in a hazardous condition.

Checking Manifold Pressures

Both Propane and Natural Gas valves have a built-in pressure regulator.
Natural Gas models will have a manifold pressure of approximately 3.5-inch w.c. (.871kPa) at the valve outlet with the inlet pressure to the valve from a minimum of 4.5-inch w.c. (1.120kPa) for the purpose of input adjustment to a maximum of 14.0-inch w.c. (3.484kPa).
Propane Gas models will have a manifold pressure of approximately 10.0-inch w.c. (2.49kPa) at the valve outlet with the inlet pressure to the valve from a minimum of 10.8-inch w.c. (2.68kPa) for the purpose of input adjustment to a maximum of 14.0-inch w.c. (3.484kPa).

	Gas Supply Pressure (inches w.c.)		
	Minimum	Normal	Maximum
Natural Gas	4.5	7.0	14.0
Propane Gas	10.8	11.0	14.0
	Manifold Pressure (inches w.c.)		
	Normal (HI)		
Natural Gas	3.5		
Propane Gas	10.0		

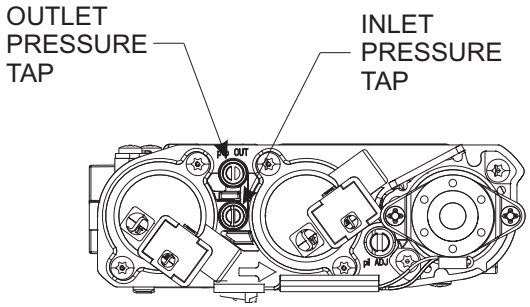

Figure 6 - IP Valve

ELECTRICAL CONSIDERATIONS

⚠ CAUTION

All wiring should be done by a qualified electrician and shall be in compliance with all local, city and state building codes. Before making the electrical connection make sure the main power supply is disconnected. The appliance, when installed, must be electrically grounded in accordance with local codes, or in the absence of local codes, with the National Electrical Code ANSI/NFPA70 (Latest Edition).

FIREPLACE PREPARATION

Before You Start

Before installing, read these instructions and the Vent Kit Instructions to ensure proper installation. Consult local Building Codes before beginning the Installation.

NOTICE: Cutting the sheet metal parts of an existing fireplace to install the fireplace insert is prohibited unless mentioned below.

1. The fireplace and fireplace chimney must be cleaned and inspected to insure it is in good working order. The venting for the fireplace insert must run through the chimney for the fireplace or masonry chimney and meet criteria on NFPA211.

⚠ WARNING

Do not handle barrier screen or door assembly with your bare hands! (Always Wear Gloves)

2. Remove the barrier screen, glass door and log package from the fireplace insert. Check for damage to the fireplace insert or its components.
3. Plan out the gas, venting and electrical route. Start with the gas line, followed by the chimney preparation and electrical supply requirements.
4. Make sure that all chimney cleanouts fit properly so air cannot leak into the chimney.
5. Remove or lock the fireplace flue damper in the fully open position.
6. The minimum fireplace opening requirements are shown in page 11 of this installation manual. The firebrick (refractory), glass doors, screen rails, screen mesh and log grates can be removed from a factory built fireplace to increase the opening size. **See Figure 7.**
7. The fireplace insert does not require any additional hearth extension, however, the original hearth materials installed with the fireplace must be retained. If the original materials have been damaged or removed, a new one must be installed. Hearth materials must consist of a non-combustible material such as brick, tile, slate or marble extending the width of the fireplace and out a minimum of 16 inches in front. Wood flooring, vinyl, or carpet are not allowed directly in front of the fireplace insert.
   NOTICE: The original fireplace cannot be returned to solid fuel use without returning the hearth extension to the specification required for a solid fuel fireplace.
8. The metal floor of the solid fuel firebox may be removed to install the insert. If the firebox floor is removed, the insert must be raised off the floor of the fireplace at least 1/4 inch to protect the combustible surface under the original fireplace. Clearance to combustible material under the insert is 1/4-inch. Combustible material must not be placed inside the original area. The side walls and top structure of the firebox may not be altered with the exception of removable baffles and dampers. The original fireplace cannot be returned to solid fuel in this condition. **See Figure 7.**

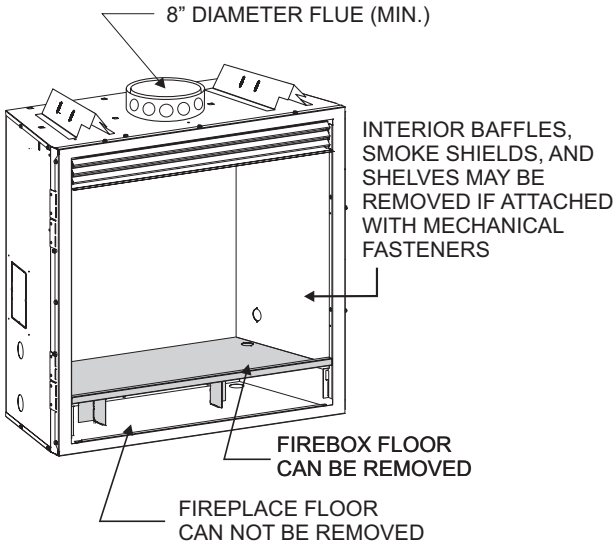

GENERIC FACTORY-BUILT WOODBURNING FIREPLACE SHOWN

Figure 7

NOTICE: The following statement is also provided on a separate warning label plate in the instruction packet. Prior to installation of the fireplace insert, the installer must mechanically secure this warning label plate to the inside of the fireplace for future reference as required.

⚠ WARNING

This solid fuel fireplace has been converted for use with gas only and cannot be used for burning wood or solid fuels unless all original parts have been replaced and the fireplace has been reapproved by the authority having jurisdiction.

Clearances

- Maintain the original specified exterior clearances of the factory-built fireplace and vent system.
- Maintain the mantel and trim clearances on a masonry fireplace at 12 inches above the opening for combustible projections over 1-1/2 inches.
- Clearances for combustible projections under 1-1/2 inches must be maintained at 6 inches above the opening per NFPA211. Plan the surround size accordingly. A surround must be used with the insert. No combustible material be placed behind the surround or behind the insert!

VENTING

Vent System Installation Precautions

Before installing vent kits, read these instructions and the vent kit Instructions. Consult local Building Codes before beginning the Installation.

To ensure top performance, safety and efficiency, inserts must be installed with an approved flue liner as per CAN/CGA B-149 or National Fuel Code ANSI Z223 and these instructions.

⚠ WARNING

This gas insert and vent assembly must be vented directly to the outside and must never be attached to a chimney serving a separate solid-fuel burning or gas-venting appliance.

Vent System Approvals

Figure 11 shows the vent termination cap and system approved for use with these models. Approved vent system terminations are labeled for identification. Use 3-inch diameter, flexible aluminum or stainless steel gas venting for the incoming combustion air. Use 4-inch diameter flexible aluminum or stainless steel gas venting for exhaust vent pipe. **No other venting systems or components may be used.** Detailed installation instructions are included with each vent termination kit and should be installed in conjunction with this manual.

Horizontal Venting

The vent system on this model **CANNOT** be terminated horizontally.

Vertical Venting

The inlet and exhaust vent pipes **MUST** be connected to the proper collars on the unit **AND** to the termination cap or the unit will not operate.

⚠ WARNING

Major U.S. building codes specify minimum chimney and/or vent height above the roof top. These minimum heights are necessary in the interest of safety. See Figures 8 and 9 for minimum heights, provided the termination cap is at least 2 feet from a vertical wall and 2 feet below a horizontal overhang.

NOTICE: The above warning also pertains to vertical vent systems installed on the outside of the building.

⚠ WARNING

The exhaust pipe must only be connected to the exhaust starting collar of the unit and to the exhaust collar of the termination cap.

The inlet air pipe must only be connected to the inlet air starting collar of the unit and to the inlet air collar of the termination cap. Both the inlet vent and the flue vent must be connected from the insert to the vent termination cap.

NOTICE: The minimum vertical vent rise is 10 feet and the maximum vertical vent rise is 40 feet. These dimensions are measured from the starting collars of the unit to the end of the last section of vent pipe. **See Figure 11,** page 17.

NOTICE: The vent cap must be in open, free air. It cannot be installed under an existing cap shared by other flues.

VERTICAL TERMINATION

Determining Minimum Vent Height Above the Roof.

NOTICE: Major U.S. building codes specify minimum chimney height above the roof top. These specifications are summarized in **Figure 8.**

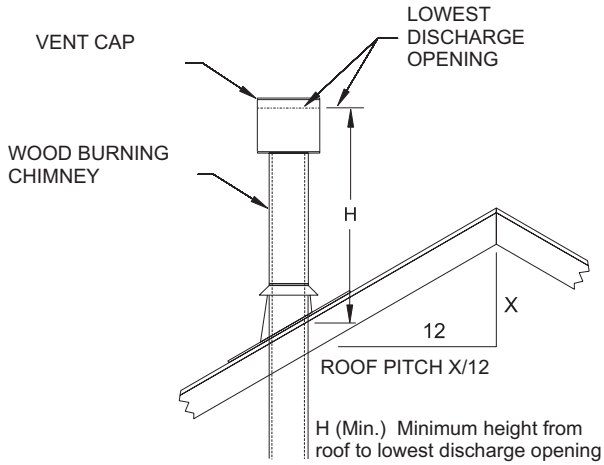

ROOF PITCH	H (Min.) (in inches)
Flat to 6/12	12
6/12 to 7/12	15
Over 7/12 to 8/12	18
Over 8/12 to 16/12	24
Over 16/12 to 21/12	36

Figure 8

NOTICE: Increase the vent height for steep roof pitches. In high-wind conditions, nearby trees, adjoining roof lines, steep pitched roofs, and other similar factors can result in poor draft, or down-drafting. In these cases, increasing the vent height may solve this problem.

When terminating the vent cap near an exterior wall or overhang, maintain minimum clearances as shown in **Figure 9.**

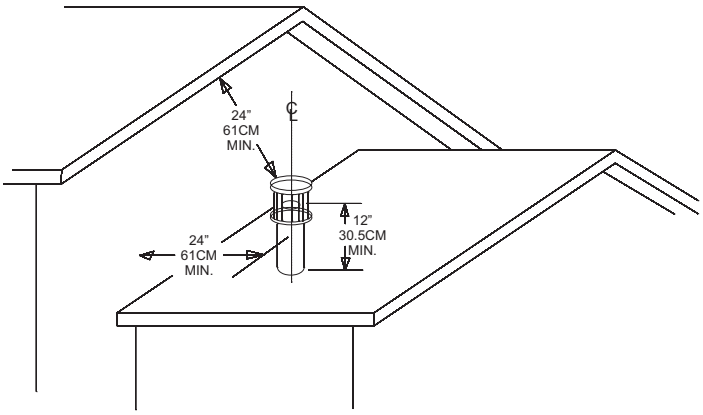

Figure 9

Vertical Applications

The Gas Fireplace Insert has been approved for vertical installations up to 40 feet in height (starting of collars to end of vent pipe).

General Maintenance

Conduct an inspection of the venting system semi-annually. Recommended areas to inspect are as follows:

1. Check areas of the venting system which are exposed to the elements for corrosion. These will appear as rust spots or streaks and, in extreme cases, holes. These components should immediately be replaced.
2. Remove the cap and shine a flashlight down the vent. Remove any bird nests or other foreign material.
3. Check for evidence of excessive condensate, such as water droplets forming in the flex venting and subsequently dripping out at joints or seams. Condensate can cause corrosion of caps, pipe and fittings. It may be caused by having excessive runs, or having exterior portions of the system exposed to cold weather.
4. Inspect joints to verify that no pipe sections or fittings have been disturbed and, consequently, loosened. Check mechanical supports.

INSTALLATION

⚠ CAUTION

The vent cap and vent tubing have sharp edges. Wear gloves when unpacking and installing.

Connect the Vent Pipe and Install the Fireplace Insert

For fireplace vent pipe and insert installation refer to information 1 through 6 below. **See Figure 10.**

1. Measure chimney height.
2. Stretch liners out completely.
3. Trim liners to chimney height to allow 2 to 3 feet extra.
4. Attach liners to cap and flashing with clamps and sealant.
5. Verify chimney is clear of blockage and damper is open.
6. Install the vent tubing down the chimney.
7. Install leveling legs. **See Figure 11.**

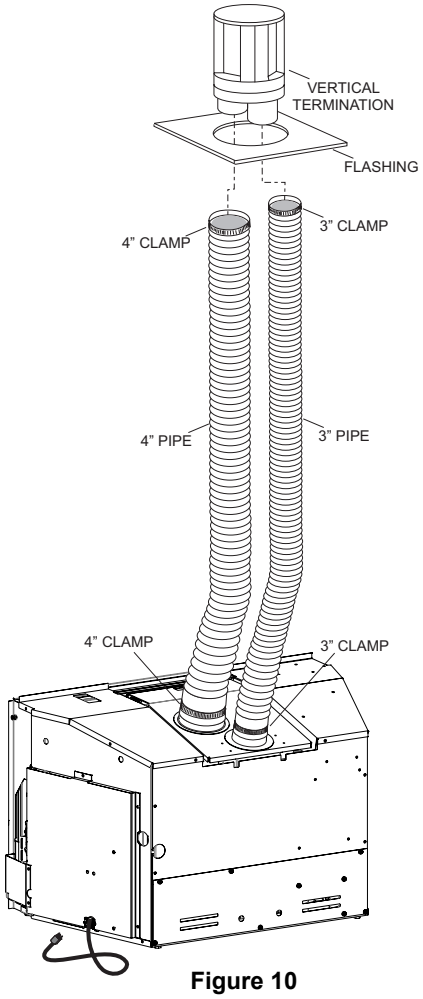

Figure 10

⚠ CAUTION

Seal off the area between the termination cap and the top of the solid-fuel chimney opening into which the vent cap is installed to avoid downdrafts and/or cold air problems.

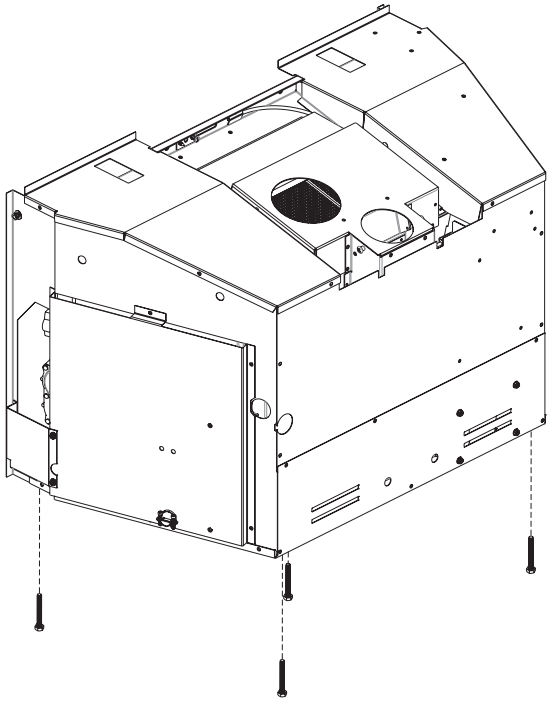

Figure 11

SPECIAL DV VENT KITS Available From Empire Comfort Systems, Inc. Dealers	
SD46DVACL34	High-wind round cap, flashing, 35 feet of 3-inch diameter pipe, 35 feet of 4-inch diameter pipe, and clamps. Recommended when installing to an existing round fireplace chimney pipe.
SD3DFA35	35 feet of 3-inch Diameter Pipe With 2 Clamps
SD4DFA35	35 feet of 4-inch Diameter Pipe With 2 Clamps
DVIC3	3-inch Connector With 2 Clamps
DVIC4	4-inch Connector With 2 Clamps
Other Special DV Vent Kit Not Available Through Empire Comfort Systems	
4DVT43FK (Metal Fab)	High-wind round cap, flashing, 35 feet of 3-inch diameter pipe, 35 feet of 4-inch diameter pipe, and clamps. Recommended when installing to an existing round fireplace chimney pipe.

SPECIAL VENT SYSTEMS

The following vent systems are acceptable for use with the DVCT(30,35) series fireplaces:

- Simpson Duravent®
- Metal Fab

8. Set insert in front of fireplace opening.
9. If necessary, remove the 2 hex screws from the vent slide plate assembly. Remove the slide plate from the top of the insert. **See Figure 12.**

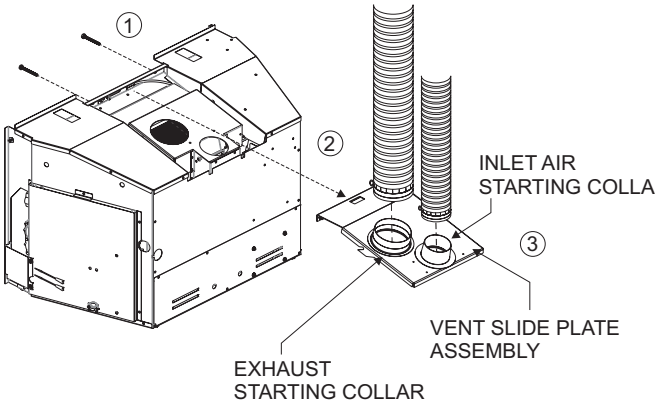

Figure 12

10. Trim off excess venting then attach and secure the bottom ends of the flex pipes to the collars with the adjustable band clamps provided.
11. Make all gas and electrical connections.
12. Slide the gas insert in front of fireplace. Do not leave an excess of pipe that could cause a restriction in the intake or exhaust system.
13. If removed, align the vent slide plate assembly with the guides located on top of the insert.

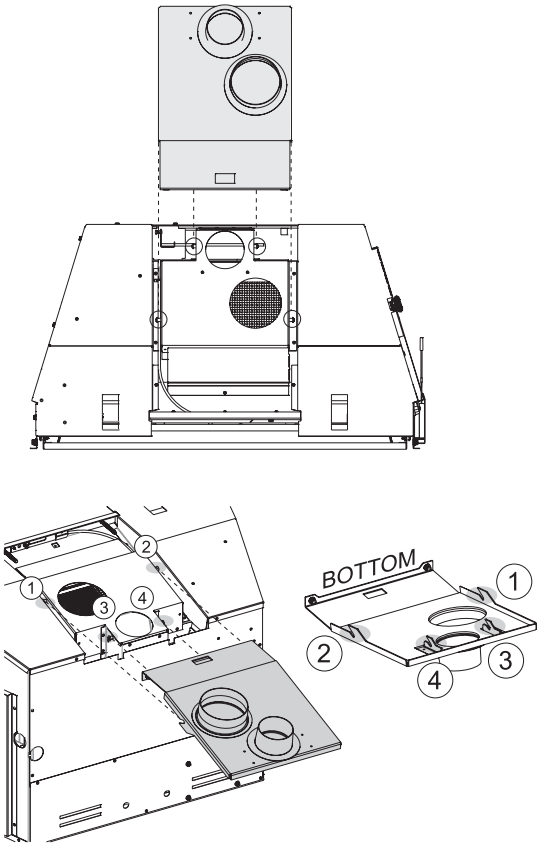

Figure 13

14. Work the insert into the fireplace cavity as you pull forward on the vent slide plate. Do not use excessive force on the vent slide plate.

NOTICE: The front flanges of the insert should be set at approximately 1-inch in front of the face of the fireplace.

15. Level the insert from side to side and front to back by turning the adjusting legs.
    NOTICE: If desired, attach metal strapping or brackets (not provided) from the fireplace cavity to the insert outer jacket to secure the fireplace insert to the fireplace hearth or opening.

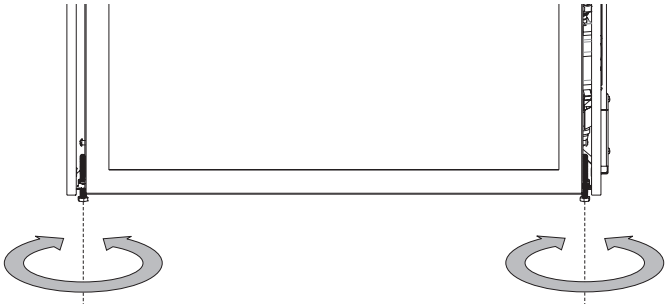

Figure 14

16. Once the fireplace insert is level and the vent slide plate is close to seating, install the two black head 1/4 -20 x 2-inch long bolts through the holes of the insert top bracket, and into the vent slide plate nuts.

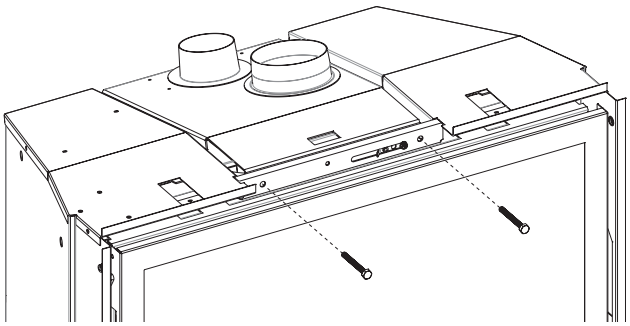

Figure 15

17. Tighten the bolts with manual socket wrench by alternating between the bolts. Leave 7/8 inch gap between slide plate and front damper control bracket.

18. Remove barrier screen assembly by lifting the screen assembly and pulling it toward you. **See Figure 16.**

⚠ CAUTION

Do not handle barrier screen or door assembly with your bare hands! (ALWAYS WEAR GLOVES)

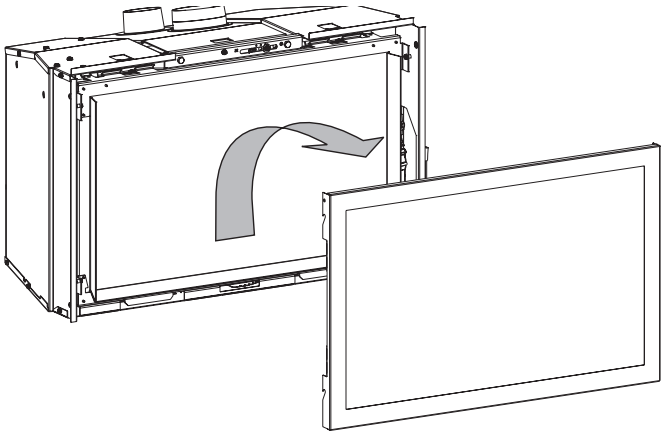

Figure 16

19. Remove glass door assembly: Using the glass door latch tool provided, hook onto the latches on the top of the insert and pry it over the glass door assembly flanges. The top of the glass door assembly will angle toward you. Simply lift to remove the glass door assembly. **See Figure 17.**

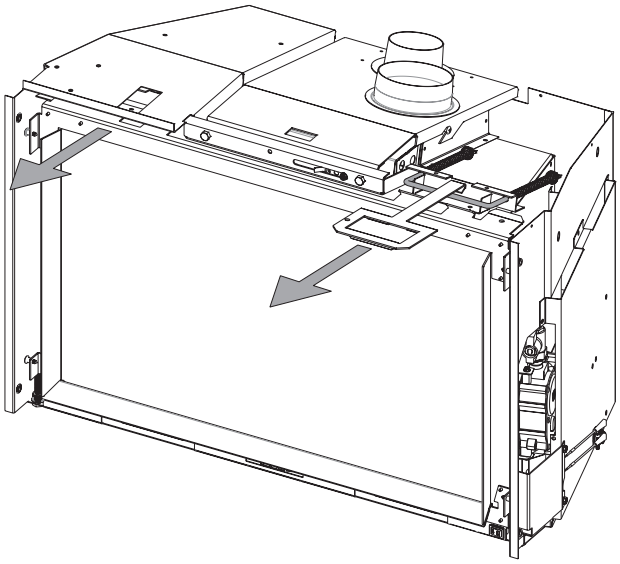

Figure 17

20. **Sync Remote.**

Push the sync button to the right of the insert. **See Figure 18.** With the batteries already installed in the transmitter, push the ON button. The receiver will "beep" four times to indicate the transmitter's command is accepted and sets to the particular code of that transmitter. The system is now initialized.

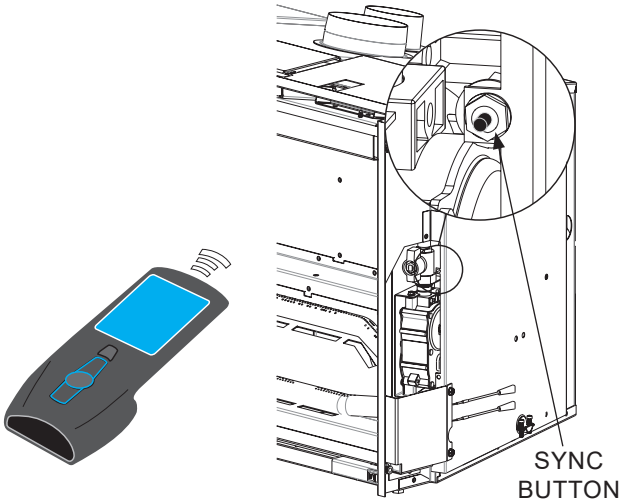

Figure 18

- Install liners, logs, and rock wool. See liner and log set instructions for the proper placement. Placement of the glowing embers is for a glowing effect based on the look you desire. Embers look best when placed in layers. Do not place glowing embers around the pilot assembly. Place pebbles across the front. Avoid blocking the large rectangular holes.

21. Reinstall door assembly removed in step 19.
22. Adjust damper and air shutter for perfect burn. Allow about 15 minutes for flame to stabilize. **See Figures 19-21** and the following two tables.

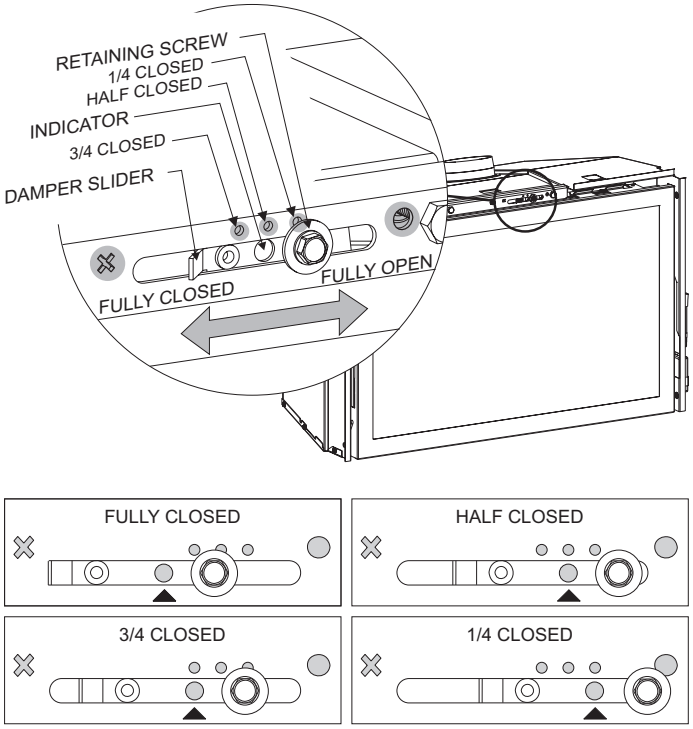

Figure 19

DAMPER ADJUSTMENT GUIDELINES

VENT LENGTH	DVCT30		DVCT35	
	Propane	Natural	Propane	Natural
10 ft	1/2 Closed	1/2 Closed	1/2 Closed	1/4 Closed
20 ft	1/2 - 3/4 Closed	3/4 Closed	1/2 Closed	1/2 Closed
30 ft	1/2 - 3/4 Closed	3/4 Closed	3/4 Closed	1/2 Closed
40 ft	3/4 Closed	Fully Closed	Fully Closed	3/4 Closed

This Unit Is Equipped With Two Adjustable Air Shutters.

The installer will adjust the rear air shuttter while unit is burning. The unit is sent out with the recommended setting, but may need to be fine tuned by installer. The homeowner should NOT attempt to adjust these shutters.

NOTICE: Fireplace must be turned off and cool to the touch before proceeding.

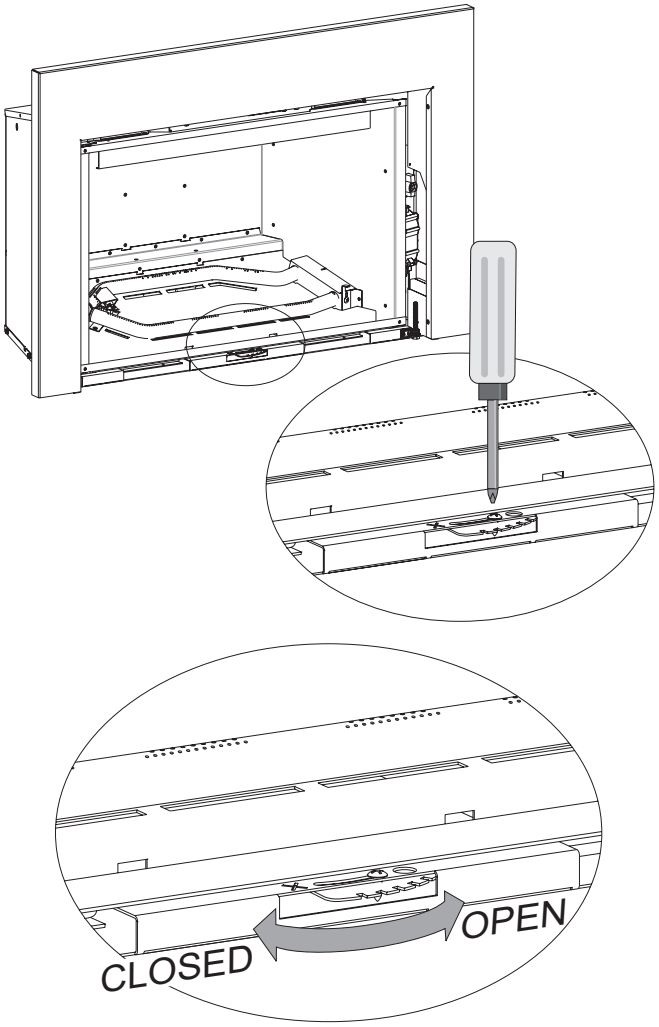

Rear Air Shutter Adjustment
Figure 20

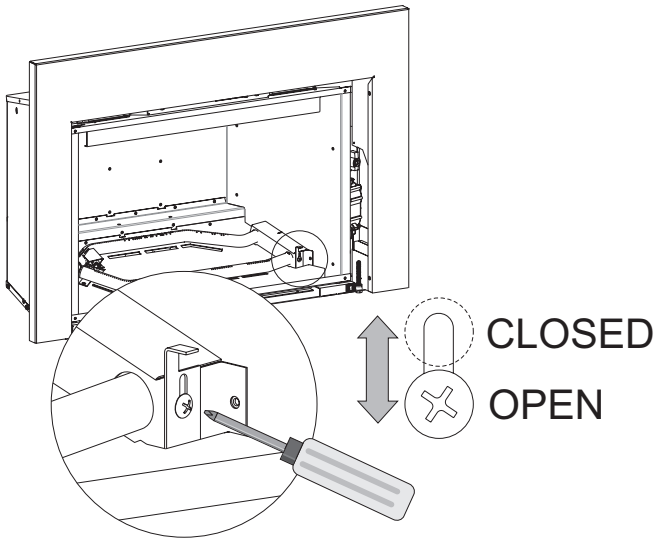

Front Air Shutter Adjustment
Figure 21

REAR BURNER AIR SHUTTER GUIDELINES

VENT LENGTH	DVCT30	
	Propane	Natural
10 ft	Open	Full Closed
20 ft	1/2 - 3/4 Closed	Full Closed
30 ft	1/2 - 3/4 Closed	Full Closed
40 ft	1/2 Closed	Full Closed

VENT LENGTH	DVCT35	
	Propane	Natural
10 ft	1/2 Closed	1/2 Closed
20 ft	1/2 Closed	1/2 Closed
30 ft	3/4 Closed	3/4 Closed
40 ft	3/4 Closed	3/4 Closed

NOTICE: The front air shutter is closed for Natural Gas and open for Propane. No adjustment may be necessary.

23. Refer to instructions included with the surround kit to install it.

⚠ WARNING

Only surrounds and decorative fronts supplied by the manufacturer may be used to cover integral grills on the solid-fuel burning fireplace. No other components such as sheet metal plates may be used to seal off vents.

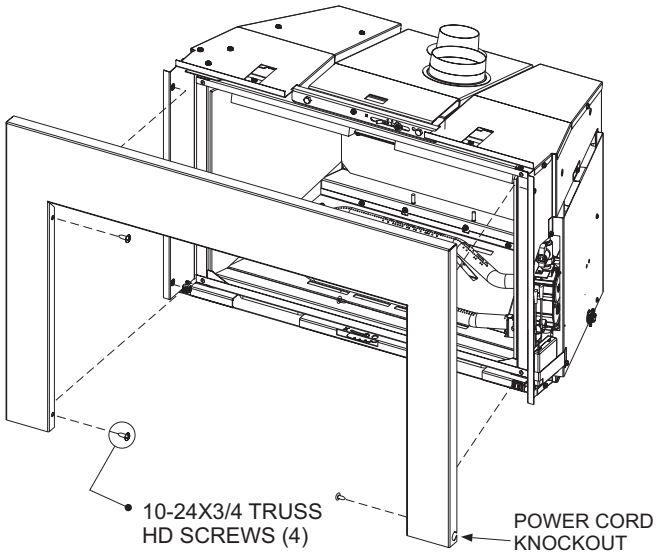

Figure 22

24. Seasonal switch must be in "ON" position.

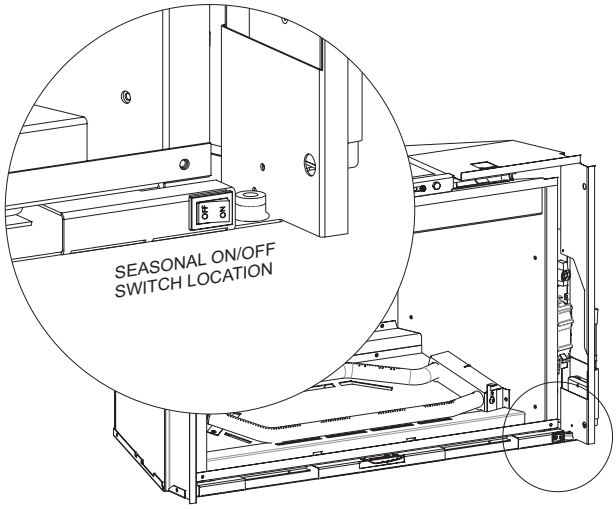

Figure 23

25. Reinstall the barrier screen. **See Figure 24.**

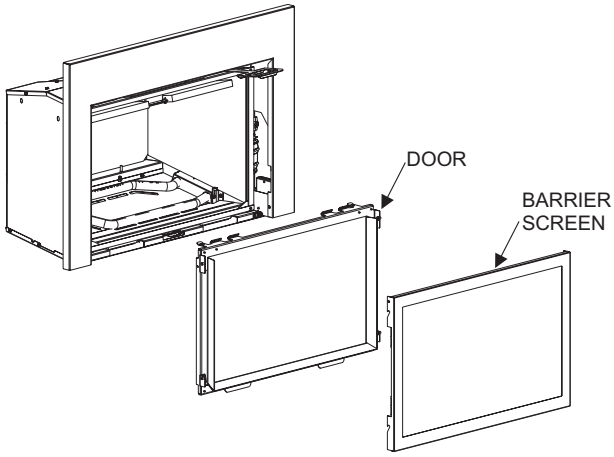

Figure 24

26. Install optional decorative front.

IPI ELECTRONIC SYSTEM WIRING DIAGRAM

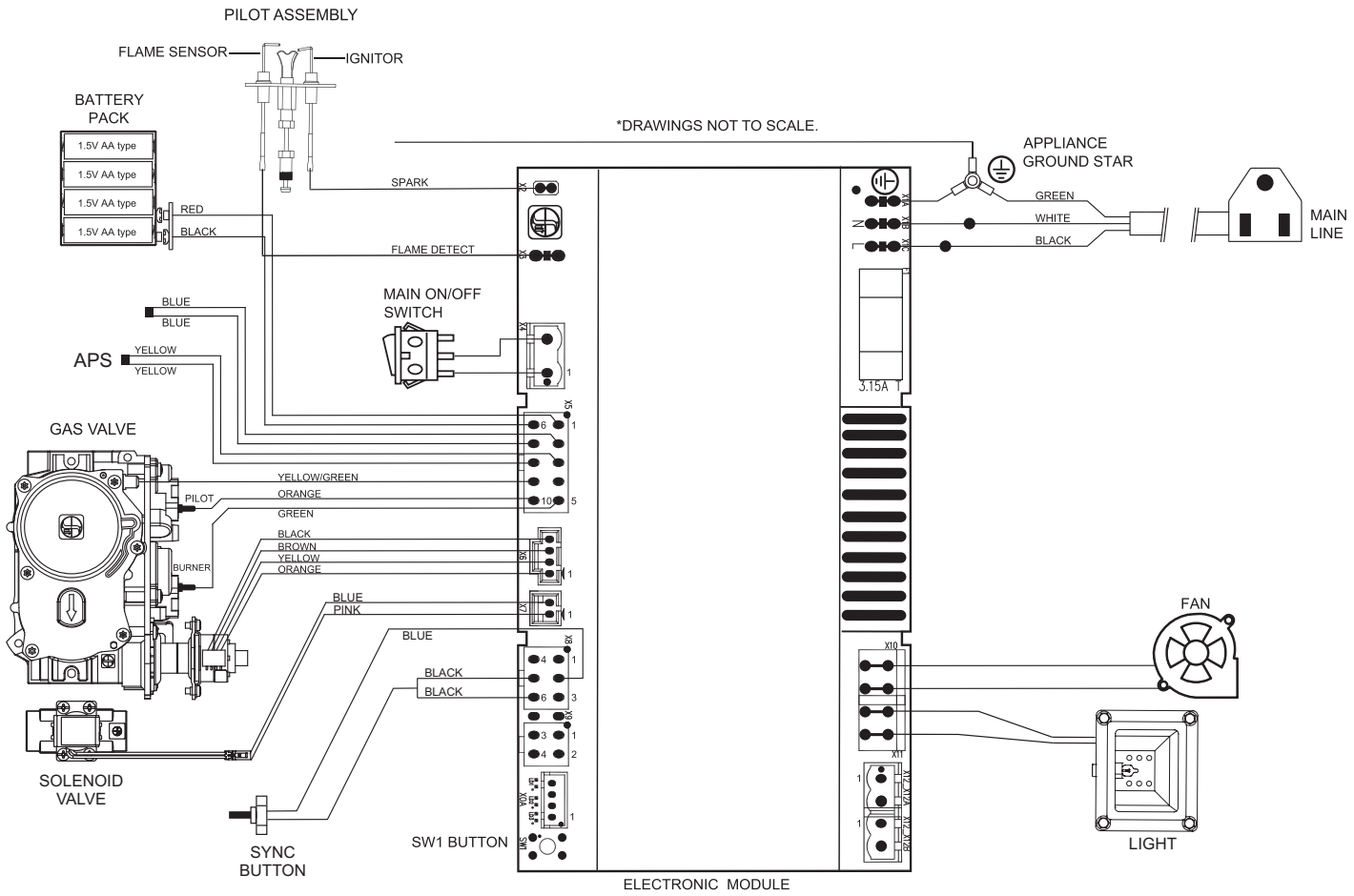

If any of the original wire as supplied with this unit must be replaced, it must be replaced with equivalent gauge and temperature rated wire.

This appliance is only for use with the type of gas indicated on the rating plate and may be installed in an aftermarket, permanently located, manufactured (mobile) home where not prohibited by local codes. This appliance is not convertible for use with other gases, unless a certified kit is used.

⚠ CAUTION

Do not operate the appliance with liner panel(s) removed, or damaged. Replacement of the liner panel(s) should be done by a licensed or qualified service person.

⚠ WARNING

Improper installation, adjustment, alteration, service or maintenance can cause property damage, personal injury or loss of life. Installation and service must be performed by a qualified installer, service agency or the gas supplier.

⚠ WARNING

ELECTRICAL GROUNDING INSTRUCTIONS
This appliance is equipped with a three-prong (grounding) plug to protect against shock hazard. It must be plugged directly into a properly grounded three-prong receptacle. Do not remove the grounding prong.

⚠ CAUTION

Label all wires prior to disconnection when servicing controls. Wiring errors can cause improper and dangerous operation.

INTERMITTENT PILOT LIGHTING INSTRUCTIONS

FOR YOUR SAFETY READ BEFORE LIGHTING

⚠ WARNING

If you do not follow these instructions exactly, a fire or explosion may result causing property damage, personal injury or loss of life.

A. This appliance is equipped with an ignition device which automatically lights the pilot. Do not try to light the pilot by hand, use the remote control. Before lighting the pilot, ensure that the master switch is on. When lighting the pilot, follow these instructions exactly.

B. Before lighting smell all around the appliance area for gas. Be sure to smell next to the floor because some gas is heavier than air and will settle on the floor.

What To Do If You Smell Gas
- Do not try to light any appliance.
- Do not touch any electrical switch;
- Do not use any phone in your building.
- Immediately call your gas supplier from a neighbor's phone. Follow the gas supplier's instructions.
- If you cannot reach your gas supplier, call the fire department.

C. Use only the remote control or manual remote receiver switch to operate the gas valve. Never use tools. If valve does not operate, don't try to repair it, call a qualified service technician. Force or attempted repair may result in a fire or explosion.

D. Do not use this appliance if any part has been under water. Immediately call a qualified service technician to inspect the appliance and to replace any part of the control system and any gas control which has been under water.

LIGHTING INSTRUCTIONS

1. STOP! Read the safety information above.
2. Turn OFF electric power to the appliance.
3. Remove front surround panel assembly or bottom louver if included.
4. Turn gas shut-off valve counterclockwise ↶ to "On" position.
5. Wait ten minutes to clear out any gas. Then smell for gas, including near the floor. If you smell gas, STOP! Follow "B" in the safety information above on this page. If you do not smell gas, go to the next step.

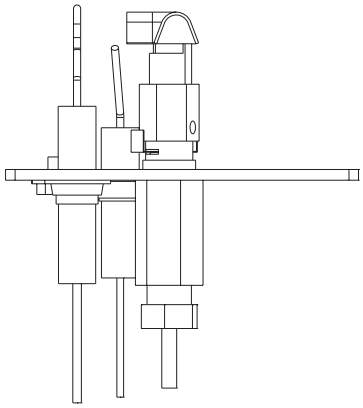

6. Turn ON electric power to the appliance.
7. Find pilot - Follow metal tube from gas control. The pilot is behind the burner on the right side.
8. Turn main flame to on. If the pilot does not light within 60 seconds, stop and go to Step 5.
9. If the burner or pilot does not operate properly after several tries, turn the gas shut-off valve clockwise ↷ to "OFF" and call your service technician or gas supplier.
10. Replace the front surround assembly or close bottom louver assembly (if applicable).
11. Operation of the gas valve is controlled by a manual on/off switch or a hand held remote control. Refer to remote instructions for detailed operation information.

GAS SHUT-OFF VALVE

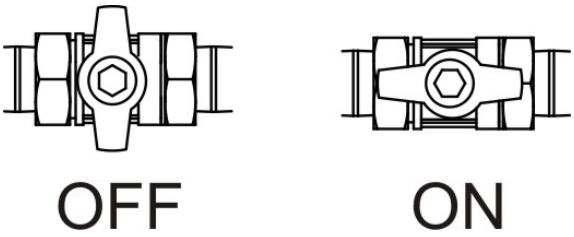

TO TURN OFF GAS TO FIREPLACE

1. Turn off all electric power to the appliance if service is to be performed (if applicable).
2. Turn gas shut-off valve to "OFF" position.

SAFETY INFORMATION FOR USERS OF PROPANE GAS

Propane is a flammable gas which can cause fires and explosions. In its natural state, propane is odorless and colorless. You may not know all the following safety precautions which can protect both you and your family from an accident. Read them carefully now, then review them point by point with the members of your household. Someday when there may not be a minute to lose, everyone's safety will depend on knowing exactly what to do. If, after reading the following information, you feel you still need more information, please contact your gas supplier.

PROPANE-GAS WARNING ODOR

If a gas leak happens, you should be able to smell the gas because of the odorant put in the Propane Gas. That's your signal to go into immediate action!

- Do not operate electric switches, light matches, use your phone. Do not do anything that could ignite the gas.
- Get everyone out of the building, vehicle, trailer, or area. Do that IMMEDIATELY.
- Close all gas tank or cylinder supply valves.
- Propane Gas is heavier than air and may settle in low areas such as basements. When you have reason to suspect a gas leak, keep out of basements and other low areas. Stay out until firefighters declare them to be safe.
- Use your neighbor's phone and call a trained Propane Gas service person and the fire department. Even though you may not continue to smell gas, do not turn on the gas again. Do not re-enter the building, vehicle, trailer, or area.
- **Finally,** let the service man and firefighters check for escaped gas. Have them air out the area before you return. Properly trained Propane Gas service people should repair the leak, then check and relight the gas appliance for you.

NO ODOR DETECTED - ODOR FADE

Some people cannot smell well. Some people cannot smell the odor of the chemical put into the gas. You must find out if you can smell the odorant in propane. Smoking can decrease your ability to smell. Being around an odor for a time can affect your sensitivity or ability to detect that odor. Sometimes other odors in the area mask the gas odor. People may not smell the gas odor or their minds are on something else. Thinking about smelling a gas odor can make it easier to smell.

The odorant in Propane Gas is colorless, and it can fade under some circumstances. For example, if there is an underground leak, the movement of the gas through soil can filter the odorant. Odorants in Propane Gas also are subject to oxidation. This fading can occur if there is rust inside the storage tank or in iron gas pipes.

The odorant in escaped gas can adsorb or absorb onto or into walls, masonry and other materials and fabrics in a room. That will take some of the odorant out of the gas, reducing its odor intensity. Propane Gas may stratify in a closed area, and the odor intensity could vary at different levels. Since it is heavier than air, there may be more odor at lower levels. Always be sensitive to the slightest gas odor. If you detect any odor, treat it as a serious leak. Immediately go into action as instructed earlier.

SOME POINTS TO REMEMBER

- Learn to recognize the odor of Propane Gas. Your local Propane Gas Dealer can give you a "Scratch and Sniff" pamphlet. Use it to find out what the propane odor smells like. If you suspect that your Propane Gas has a weak or abnormal odor, call your Propane Gas Dealer.
- If you are not qualified, do not light pilot lights, perform service, or make adjustments to appliances on the Propane Gas system. If you are qualified, consciously think about the odor of Propane Gas prior to and while lighting pilot lights or performing service or making adjustments.
- Sometimes a basement or a closed-up house has a musty smell that can cover up the Propane Gas odor. Do not try to light pilot lights, perform service, or make adjustments in an area where the conditions are such that you may not detect the odor if there has been a leak of Propane Gas.
- Odor fade, due to oxidation by rust or adsorption on walls of new cylinders and tanks, is possible. Therefore, people should be particularly alert and careful when new tanks or cylinders are placed in service. Odor fade can occur in new tanks, or reinstalled old tanks, if they are filled and allowed to set too long before refilling. Cylinders and tanks which have been out of service for a time may develop internal rust which will cause odor fade. If such conditions are suspected to exist, a periodic sniff test of the gas is advisable. **If you have any question about the gas odor, call your Propane Gas Dealer. A periodic sniff test of the propane-gas is a good safety measure under any condition.**
- If, at any time, you do not smell the Propane Gas odorant and you think you should, assume you have a leak. Then take the same immediate action recommended above for the occasion when you do detect the odorized Propane Gas.
- If you experience a complete "gas out," (the container is under no vapor pressure), turn the tank valve off immediately. If the container valve is left on, the container may draw in some air through openings such as pilot light orifices. If this occurs, some new internal rusting could occur. If the valve is left open, then treat the container as a new tank. Always be sure your container is under vapor pressure by turning it off at the container before it goes completely empty or having it refilled before it is completely empty.

INTERMITTENT CONTROL SYSTEM TROUBLESHOOTING

BRIEF DESCRIPTION OF THE COMPONENTS

The controls are designed to be used with either Propane or Natural Gas and can be converted by use of an OEM supplied conversion kit.
The Intermittent Fireplace Control (IFC) is an automatic gas ignition system based on a single microcontroller core. This control manages all functions related to ignition, flame sensing and supervision for atmospheric applications.
The IFC can be set to provide continuous or intermittent ignition control sequences and flame monitoring with safety shutdown in case of failure.
The IFC is set up as a stand alone AC-powered system with battery back-up. See Wiring Diagram on page 22 and Lighting Instructions on page 23.

TROUBLESHOOTING

Before proceeding with the troubleshooting table, verify that the power supply (AC/DC adapter) is present and that the batteries inside the receiver and/or optional battery pack are fresh and installed with correct polarity.
Make sure all the connections between the wire harnesses and system components are proper and positive.
Verify that the static inlet pressure meets the manufacturer's recommended inlet pressure. If necessary adjust the line pressure regulator.
If the recommended actions for the following troubleshooting chart do not help to address the problem consider replacing wiring harnesses.

⚠ WARNING

Any actions performed on the gas valve, IFC, or other system components must be performed in accordance with this instruction manual and individual component instructions. Replace components in accordance with this instruction manual.

INTERMITTENT CONTROL SYSTEM TROUBLESHOOTING

PROBLEM OBSERVED	POSSIBLE CAUSE	CORRECTIVE MEASURE
Gas odor during setup	Gas Leak	What To Do If You Smell Gas • Do not try to light any appliance. • Do not touch any electrical switch; • Do not use any phone in your building. • Immediately call your gas supplier from a neighbor's phone. Follow the gas supplier's instructions. • If you cannot reach your gas supplier, call the fire department.
Gas odor before first ignition		
Fireplace is "on" but no flame and pilot is not trying to light	Loose gas line connections	Check connections with leak detecting solution
	Loose electrical connections	Check connections with wiring diagram
	Receiver batteries bad	Install new batteries
	Receiver not sync with remote	Sync receiver with remote. See page 19.
	Gas Line Valve turned "off"	Turn shutoff valve to "open" position
	Control module in "lockout"	Turn fireplace "off" for 2 minutes and then back "on"
	Battery voltage low	Check voltage. Replace batteries if low.
Pilot will not ignite, or will not stay lit	Pilot igniter/sensor is dirty	Clean flame sensor and pilot igniter. See Homeowner's Manual maintenance pages 11 - 12.
	Pilot not grounded well	Check ground connections
	Sensor Wire loose	Check sensor wire terminals
	Pilot gas pressure incorrect	Adjust gas pressure
	Pilot Gas Line bent or kinked	Replace pilot tube
	Faulty pilot, Sensor bent	Replace Pilot
	Faulty valve	Replace Valve
Pilot continues to spark when pilot is lit.	Battery voltage low	Check voltage. Replace batteries if low.
	Not enough gas to pilot	Wait for pilot flame to strengthen
	Low Gas Pressure	Check pressures. See page 13.
	Pilot igniter/sensor is dirty	Clean pilot. See Homeowner's Manual maintenance pages 11 - 12.
	Pilot not grounded well	Check ground connections
	Draft in firebox	DV: vent restrictor not installed VF: redirect draft from room or wall
	Pilot sensor has been bent	Replace pilot
Burner takes too long to fully light	Low gas pressure	Check gas supply pressure
	Clogged or dirty carryover/burner ports	Clean ports
	Blocked orifice	Check orifice opening
	Faulty valve	Replace valve
Burner does not light but pilot remains on	Loose electrical connections	Check connections with wiring diagram
	Low gas pressure	Check gas supply pressure
	Clogged or dirty burner ports	Clean burner ports
	Blocked orifice	Check orifice opening
	Loose wire connections	Check valve/control module connections
	Receiver not sync with remote	Sync receiver with remote. See page 19.
	Battery too low	Change batteries
	Remote not controlling burner	Re-learn remote box and handheld remote
	Faulty pilot	Replace pilot
	Faulty valve	Replace valve

INTERMITTENT CONTROL SYSTEM TROUBLESHOOTING

PROBLEM OBSERVED	POSSIBLE CAUSE	CORRECTIVE MEASURE
Burner lights but does not stay lit while pilot remains on	Low gas pressure	Check gas supply pressure
	Loose sensor wire	Check wire connection
	Valve not grounded well	Check ground connections
	Clogged or dirty burner ports	Clean burner ports
	Room temperature is higher than thermostat setting	Move remote away from fireplace
		Set higher temperature on remote/thermostat
	Remote control batteries failing	Replace batteries in remote transmitter and receiver
	Faulty pilot or thermocouple (millivolts)	Replace pilot
	Faulty valve	Replace valve
Burner & pilot light but will not stay lit	Flame sensor dirty	Clean pilot sensor
	Low gas pressure	Check gas supply pressure
	Not enough fresh air for pilot	Open door or window - ventilate
	Clogged or dirty burner ports	Clean burner ports
	Room temperature is higher than thermostat setting	Move remote away from fireplace
		Set higher temperature on remote/thermostat
	Remote control batteries failing	Replace batteries in remote transmitter and receiver
	Faulty pilot or thermocouple	Replace pilot
Incorrect burner flame	Incorrect gas supply or pressure	Check gas supply pressure
	Blocked orifice	Check orifice opening
	Clogged or dirty burner ports	Clean burner ports
	Faulty valve	Replace valve
	High altitude	Adjust orifice size for altitude or pressure
Backfire of burner	Clogged or dirty burner ports	Clean burner ports
	Blocked orifice	Check orifice opening
	High/Low gas pressure	Check gas supply pressure
Appliance produces unwanted odors	Initial burn-off of manufacturing chemicals	Ventilate room until odor stops
	Vapors from paint, candles, air fresheners, hairspray, glue, etc.	Ventilate room until odor stops. Do not use paint, candles, air fresheners, hairspray, glue, etc around fireplace
Whistle noise from appliance	Check gas pressure	Adjust gas pressure to recommended setting.
	Air in gas line	Bleed lines
	Flex line pinched or too small diameter line	Replace pinched flexline, replace gas feed line with larger diameter, or non-whistle gas flexline (sold separately)

INSERT PARTS LIST

INDEX NO.	PART NUMBER				DESCRIPTION
	DVCT30		DVCT35		
	NATURAL	PROPANE	NATURAL	PROPANE	
1	NA	NA	NA	NA	DVCT30 Firebox
2	R12428	R12428	R12428	R12428	Blower Assembly
3	37911	37911	38369	38369	Slider Gasket Assembly
4a	R12258	R12258	NA	NA	Catalyst
4b	R12488	R12488	R12258	R12258	Catalyst
4c	R12279	R12279	R12476	R12476	Catalyst
5	R11837	R11837	R11837	R11837	Latch - Glass Door Top Assembly (2 req'd)
6	44340	44340	44340	44340	Latch Tool
7	R7572	R7572	R7572	R7572	Connector 3/8-inch Romex
8	R12908	R12908	R12908	R12908	Receiver Module
9	38074	38074	38497	38497	Tubing Assembly to Rear Burner
10	38073	38073	38496	38496	Tubing Assembly to Front Burner
11	R10418	R10418	R10418	R10418	Battery Backup
12	R13237	R13237	R13237	R13237	Light Bulb
13	R9341	R9341	R9341	R9341	Accent Lamp Glass - Ceramic
14	R9658	R9658	R9658	R9658	Accent Lamp Gasket
15	R9342	R9342	R9342	R9342	Accent Lamp Bezel
16	38041	38041	38041	38041	Pilot Hood
17	R12429	R12429	R12459	R12459	Burner Tube Rear
18	R12430	R12430	R12460	R12460	Burner Tube Front
19	38098	38098	38378	38378	Burner Base Assembly
20	R12283	R12283	R12283	R12283	Pilot (Convertible) w/ tube & wire harness
21	38042	NA	38042	NA	Target (2 req'd)
22	P311	P312	P319	P308	Orifice - Rear Burner
23	P212	P212	P212	P212	Orifice Holder
24	R7572	R7572	R7572	R7572	Jam Nut -1/4-inch - 18 NPS
25	P253	P253	P253	P253	Orifice 90 Angle Holder
26	P185	P326	P245	P320	Orifice - Front Burner
27	38060	38060	38493	38493	Air Shutter Guide
28	R11838	R11838	R11838	R11838	Latch - Glass Door Bottom Assembly (2 req'd)
29	38088	38088	38368	38368	Glass Door Assembly
30	38091	38091	38371	38371	Screen Frame Assembly
31	R12461	R12461	R12461	R12461	Flex Line 3/8-inch x 36-inch w/ shut-off valve
32	P133	P133	P133	P133	Nipple - 3/8-inch x 2-inch
33	R11233	R11234	R11233	R11234	Valve
34	R6207	R6207	R6207	R6207	5/16-inch x 3/8-inch 90 Deg Elbow
35	R2423	R2423	R2423	R2423	5/16-inch Tube Connector - 3/8-inch NPT x 1/2-24-inch
36	R12278	R12278	R12278	R12278	Split-Flow Solenoid Valve
37	R1259	R1259	R1259	R1259	90 Street Elbow - 3/8-inch x 3/8-inch
38	P227	P227	P227	P227	Nipple - 3/8-inch x 1-inch

INSERT PARTS LIST (CONT'D)

INDEX NO.	PART NUMBER				DESCRIPTION
	DVCT30		DVCT35		
	NATURAL	PROPANE	NATURAL	PROPANE	
NS	R11550	R11550	R11550	R11550	Transmitter - Remote
NS	R11515	R11515	R11515	R11515	Cord Set
NS	R12462	R12462	R12462	R12462	Module - Switch/Blower Wire Harness (2 req'd)
NS	R11524	R11524	R11524	R11524	Receiver Wire Harness
NS	R12438	R12438	R12438	R12438	Battery Box Wire Harness
NS	R12439	R12439	R12439	R12439	Learn Switch Wire Harness
NS	R11532	R11532	R11532	R11532	On/Off Rocker Switch Terminal Block
NS	R2522	R2522	R2522	R2522	On/Off Switch
NS	R11545	R11545	R11545	R11545	Light-Blower Terminal Block
NS	42984 (4)	42984 (4)	42984 (2)	42984 (2)	Support, Rockwool 2 X 1
NS	42883	42883	42883 (3)	42883 (3)	Support, Rockwool 3 X 1
NS	42985	42985	42985	42985	Support, Rockwool 6 X 1

NS - Not Shown on Insert Parts View.

INSERT PARTS VIEW

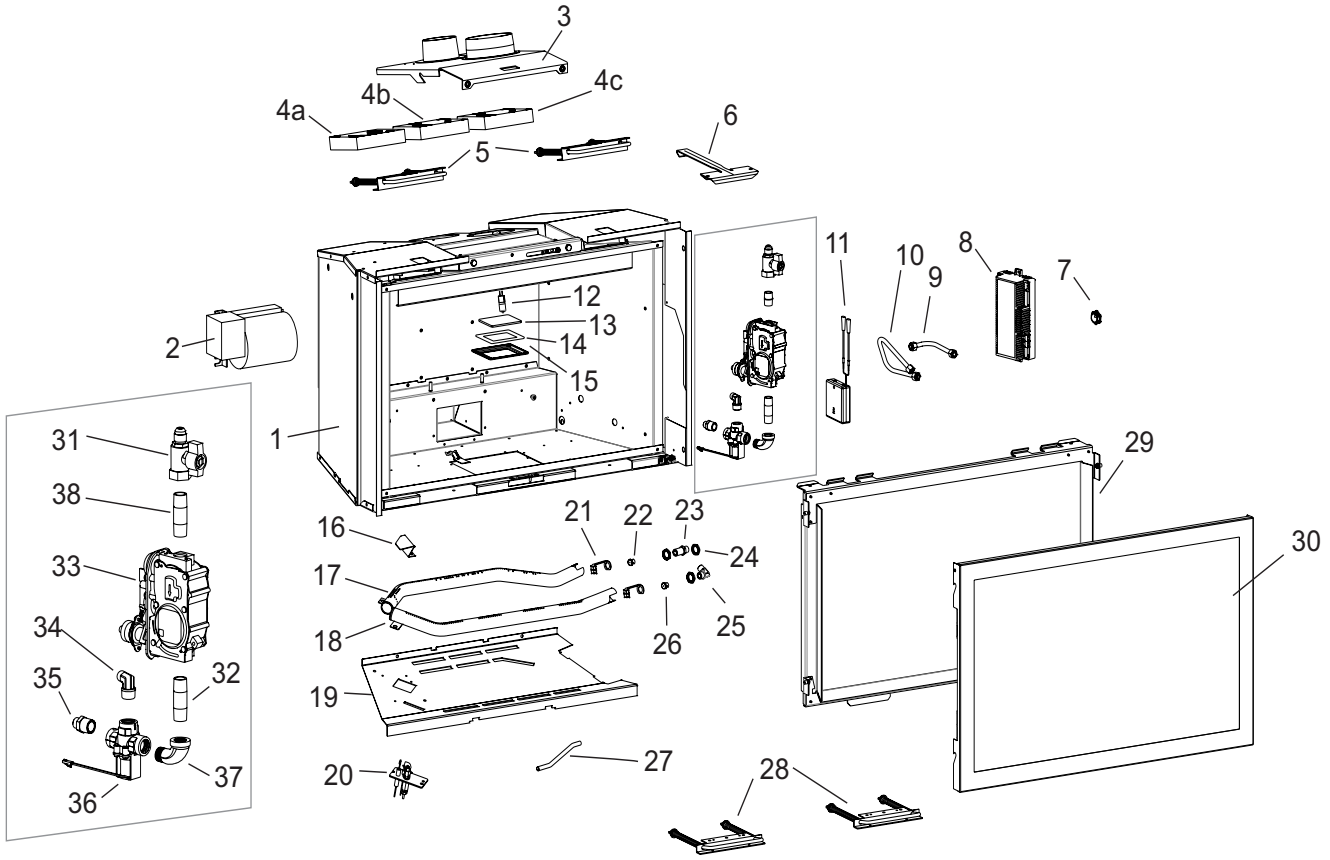

⚠ WARNING

Failure to use parts specifically approved for this appliance may result in property damage or personal injury.

MAINTENANCE AND SERVICE

FOR THE INSTALLER

Maintenance Precautions

Installation and repair should be done by a qualified service person. The fireplace should be inspected before use and at least annually by a qualified service person. More frequent cleaning might be required due to excessive lint from carpeting, bedding material, etc.

Keep burner and control compartment clean.

Examine venting system periodically and replace damaged parts.

Make a periodic visual check of pilot and burners. Clean and replace damaged parts.

Damaged Fireplace

Do not use this fireplace if any part has been under water. Immediately call a qualified service technician to inspect the fireplace and to replace any part of the control system and any gas control which has been under water.

In the event of a natural disaster (tornado, earthquake, fire, etc.) have a qualified technician inspect the fireplace for damage or potential gas leaks. Repair or replace any damaged components before operating this fireplace.

Annual Inspection

- Have the fireplace inspected annually before use.
- More frequent inspection and cleaning may be required if the fireplace is installed in an area exposed to pet hair or dust, or to excessive lint from new carpeting or bedding materials.

During The Annual Checkup, The Technician Will:

- Inspect the pilot (flame safety system) and burner(s) for proper operation and replace any damaged parts.
- Test and measure the flame failure response time of the flame safety system. It must de-energize the safety shut-off in no more than 30 seconds.
- Vacuum and clean any foreign debris in the firebox that is not supposed to be there.
- Inspect and ensure that the lighting of the main burner occurs within 4 seconds of the gas valve opening. Visual inspection should match the information illustrated in the manual. Inspect primary air openings for blockage.
- Check the glass and gasket for proper seal.
- Clean Glass with a suitable fireplace glass cleaner. Abrasive cleaners must not be used. Be careful not to scratch the glass when cleaning.
- Check all latches or other door retention components for proper operation, tension, and relief mechanisms are free from obstructions. **See Figure 17.**
- Check the barrier screen for fit and structural integrity. **See Figure 16.**
- Inspect the log set (if applicable) and decorative media (if applicable) for debris or damage.
- Freshen up the glowing embers if applicable.
- Replace batteries in the remote transmitter and receiver if applicable.
- Inspect the venting and vent termination cap for damage, corrosion, sooting, or obstruction and correct if present.
- Check all accessible gas-carrying tubes, connections, pipes and other components for leaks.
- *In addition, clean and inspect the fireplace following any remodeling work in your home.*

.

IMPORTANT SAFETY INFORMATION

Before enclosing the vent pipe assembly, operate the appliance to ensure it is venting properly.

DO NOT OPERATE THIS APPLIANCE WITHOUT GLASS FRONT PANEL INSTALLED

WARNING

1. "Due to high temperatures, the appliance should be located out of traffic and away from furniture and draperies."
2. "Children and adults should be alerted to the hazards of high surface temperature and should stay away to avoid burns or clothing ignition."
3. "Young children should be carefully supervised when they are in the same room as the appliance. Toddlers, young children, and others may be susceptible to accidental contact burns. A physical barrier is recommended if there are at-risk individuals in the house. To restrict access to a fireplace or stove, install an adjustable safety gate to keep toddlers, young children, and other at-risk individuals out of the room and away from hot surfaces."
4. For appliances requiring a barrier, as determined under Clause 5.15.4: "A barrier designed to reduce the risk of burns from the hot viewing glass is provided with this appliance and shall be installed for the protection of children and other at-risk individuals."
5. "If the barrier becomes damaged, the barrier shall be replaced with the manufacturer's barrier for this appliance."
6. "Clothing or other flammable material should not be placed on or near the appliance."
7. "Any safety screen, guard, or barrier removed for servicing an appliance must be replaced prior to operating the appliance" (see Clause 4.1.6).
8. "Installation and repair should be done by a qualified service person. The appliance should be inspected before use and at least annually by a professional service person. More frequent cleaning might be required due to excessive lint from carpeting, bedding material, et cetera. It is imperative that control compartments, burners, and circulating air passageways of the appliance be kept clean."
9. The instructions for an appliance optionally for use with glass doors (or equivalent) shall state that, "Only doors certified with the appliance shall be used."
10. The instructions for an appliance not intended for use with glass doors (or equivalent) shall emphasize that the appliance is not for use with glass doors.
11. Where applicable, provide a means by which the consumer can identify the barrier, (such as graphic representation, clear description, or reference marking).

WARNING

CARBON MONOXIDE POISONING HAZARD

Failure to follow the steps outlined below for each appliance connected to the venting system being placed into operation could result in carbon monoxide poisoning or death. The following steps shall be followed for each appliance connected to the venting system being placed into operation, while all other appliances connected to the venting system are not in operation:

1. Seal any unused openings in the venting system.
2. Inspect the venting system for proper size and horizontal pitch, as required in the *National Fuel Gas Code ANSI Z223.1/NFPA 54* or *the National Gas and Propane Installation Code* CSA B149.1 and these instructions. Determine that there is no blockage or restriction, leakage, corrosion and other deficiencies which could cause an unsafe condition.
3. As far as practical, close all building doors and windows and all doors between the space in which the appliance(s) connected to the venting system are located and other spaces of the building.
4. Close fireplace dampers.
5. Turn on clothes dryers and any appliance not connected to the venting system. Turn on any exhaust fans, such as range hoods and bathroom exhausts, so they are operating at maximum speed. Do not operate a summer exhaust fan.
6. Follow the lighting instructions. Place the appliance being inspected into operation. Adjust the thermostat so appliance is operating continuously.
7. Test for spillage from draft hood equipped appliances at the draft hood relief opening after 5 minutes of main burner operation. Use the flame of a match or candle.
8. If improper venting is observed during any of the above tests, the venting system must be corrected in accordance with *National Fuel Gas Code*, ANSI Z223.1/NFPA and/or *National Gas and Propane Installation Code*, CSA B149.1.
9. After it has been determined that each appliance connected to the venting system properly vents when tested as outlined above, return doors, windows, exhaust fans, fireplace dampers and any other gas-fired burning appliance to their previous conditions of use.

APPLIANCE SERVICE HISTORY

Date	Dealer Name	Service Technician Name	Service Performed/Notes

APPLIANCE SERVICE HISTORY

Date	Dealer Name	Service Technician Name	Service Performed/Notes

MASTER PARTS DISTRIBUTOR LIST

To Order Parts Under Warranty, please contact your local Empire dealer. See the dealer locator at www.empirecomfort.com. To provide warranty service, your dealer will need your name and address, purchase date and serial number, and the nature of the problem with the unit.
To Order Parts After the Warranty Period, please contact your dealer or one of the Master Parts Distributors listed below. This list changes from time to time. For the current list, please click on the Master Parts button at www.empirecomfort.com. Please note: Master Parts Distributors are independent businesses that stock the most commonly ordered Original Equipment repair parts for Heaters, Grills, and Fireplaces manufactured by Empire Comfort Systems Inc.

Dey Distributing
1401 Willow Lake Boulevard
Vadnais Heights, MN 55101

Phone: 651-490-9191
Toll Free: 800-397-1339
Website: www.deydistributing.com
Parts: Heater, Hearth and Grills

F. W. Webb Company
200 Locust Street
Hartford, CT 06114

Phone: 860-722-2433
Toll Free: 800-243-9360
Fax: 860-293-0479
Toll Free Fax: 800-274-2004
Website: www.fwwebb.com
Parts: Heater, Hearth and Grills

East Coast Energy Products
10 East Route 36
West Long Branch, NJ 07764

Phone: 732-870-8809
Toll Free: 800-755-8809
Fax: 732-870-8811
Website: www.eastcoastenergy.com
Parts: Heater, Hearth and Grills

HOW TO ORDER REPAIR PARTS

Parts Not Under Warranty

Parts can be ordered through your Service Person, Dealer, or a Master Parts Distributor. See this page for the Master Parts Distributors list. For best results, the **service person or dealer** should order parts through the distributor. Parts can be shipped directly to the **service person/dealer**.

Warranty Parts

Warranty parts will need a proof of purchase and can be ordered by your Service Person or Dealer. Proof of purchase is **required** for warranty parts.

All parts listed in the Parts List have a Part Number. When ordering parts, first obtain the Model Number and Serial Number from the name plate on your equipment. Then determine the Part Number (**not** the Index Number) and the Description of each part from the following illustration and part list. Be sure to give all this information . . .

Appliance Model Number _____ Part Description _____

Appliance Serial Number _____ Part Number _____

Type of Gas (Propane or Natural) _____

Do not order bolts, screws, washers or nuts. These standard hardware items can be purchased at any local hardware store.

WARRANTY

Empire Comfort Systems Inc. warranties this hearth product to be free from defects at the time of purchase and for the periods specified below. Hearth products must be installed by a qualified technician and must be maintained and operated safely, in accordance with the instructions in the owner's manual. Empire will not warranty any Château, Boulevard, or Mantis fireplace that is not installed by the selling dealer or that dealer's direct contract agents. This warranty applies to the original purchaser only and is not transferable. All warranty repairs must be accomplished by a qualified gas appliance technician.

Limited Lifetime Parts Warranty – Combustion Chamber, Heat Exchanger, and Factory-Installed Glass

If the combustion chamber, heat exchanger (see parts list) or factory-installed glass fails because of defective workmanship or material, Empire will repair or replace at Empire's option.

Limited Three-Year Parts Warranty – All Other Components
(Except Remote Controls, Thermostats, Accessories and Replacement Parts)

Should any part fail because of defective workmanship or material within three years from the date of purchase, Empire will repair or replace at Empire's option.

Limited One-Year Parts Warranty – Remote Controls, Thermostats, Accessories, and Parts

Should any remote control, thermostat, accessory, or other part fail because of defective workmanship within one year from the date of purchase, Empire will repair or replace at Empire's option.

Duties of the Owner

The appliance must be installed by a qualified installer and operated in accordance with the instructions furnished with the appliance. A bill of sale, cancelled check, or payment record should be kept to verify purchase date and establish warranty period. Ready access to the appliance for service.

What Is Not Covered

Damages that might result from the use, misuse, or improper installation of this appliance.
Travel, diagnostic costs and freight charges on warranted parts to and from the factory.
Claims that do not involve defective workmanship or materials.
Unauthorized service or parts replacements.
Removal and reinstallation cost.
Inoperable due to improper or lack of maintenance.

How To Get Service

To make a claim under this warranty, please have your receipt available and contact your installing dealer. Provide the dealer with the model number, serial number, type of gas, and purchase verification. The installing dealer is responsible for providing service and will contact the factory to initiate any warranted parts replacements. Empire will make replacement parts available at the factory. Shipping expenses are not covered.
If, after contacting your Empire dealer, service received has not been satisfactory, contact: Consumer Relations Department, Empire Comfort Systems Inc., PO Box 529, Belleville, Illinois 62222, or send an e-mail to info@empirecomfort.com with "Consumer Relations" in the subject line.

Your Rights Under State Law

This warranty gives you specific legal rights, and you may also have other rights, which vary from state to state.

Empire Comfort Systems Inc.
Belleville, IL

If you have a general question about our products, please e-mail us at info@empirecomfort.com.

If you have a service or repair question, please contact your dealer.

www.empirecomfort.com